Problem 1 (50 points)

Implement the following electric circuit on your project board:

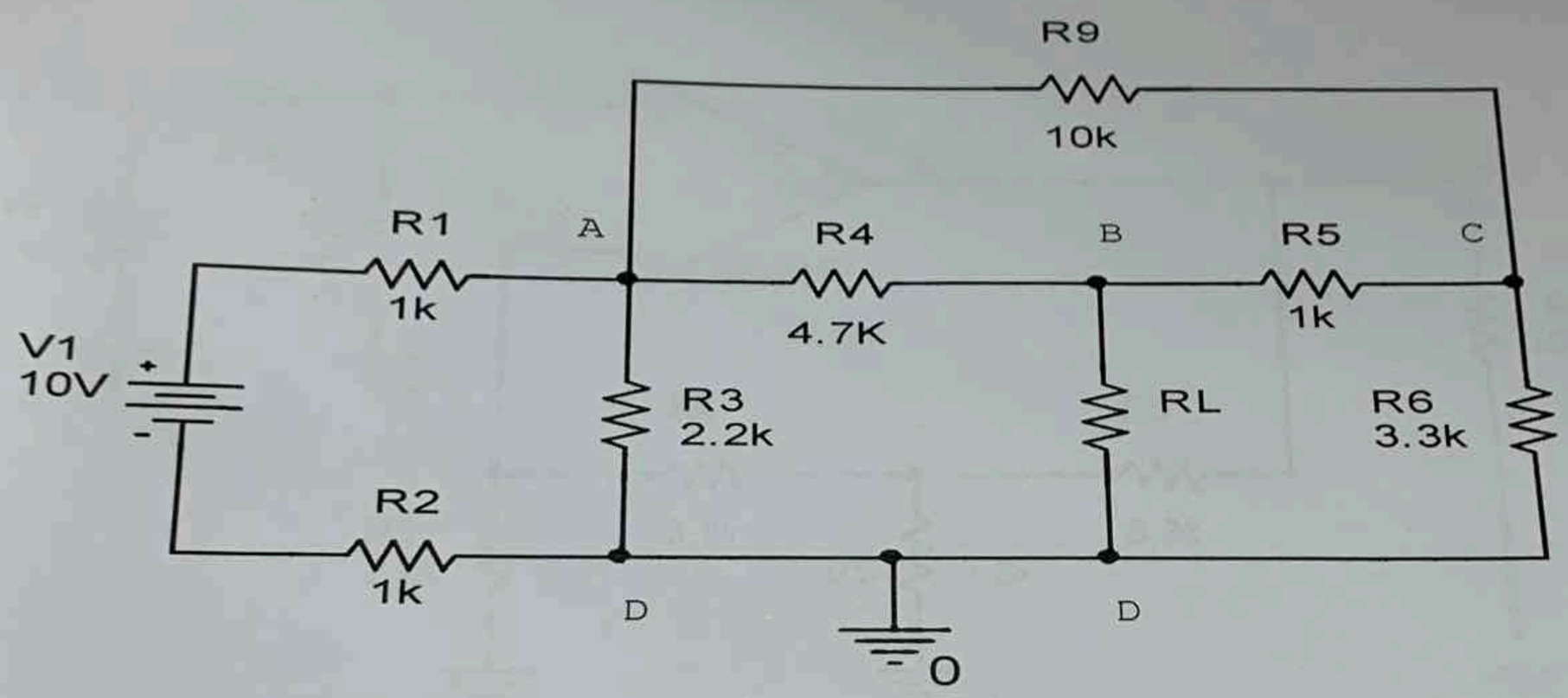

a. *Measure the Thevenin voltage between B & D.* (15 points)
b. *Measure the Thevenin resistance between B & D.* (15 points)
c. *Find the value of RL which give the maximum power.* (10 points)
d. *Draw the Thevenin equivalent circuit including RL.* (10 points)

current through R_{EB} is zero,

So, $V_{th} = I_2 \times 3.93K$.

(a) $\boxed{V_{th} = 3.85\ V.}$

To, find the Thevinen resistance, short circuit the voltage sources, and open circuit the current sources in the circuit.

The given circuit is modified to,

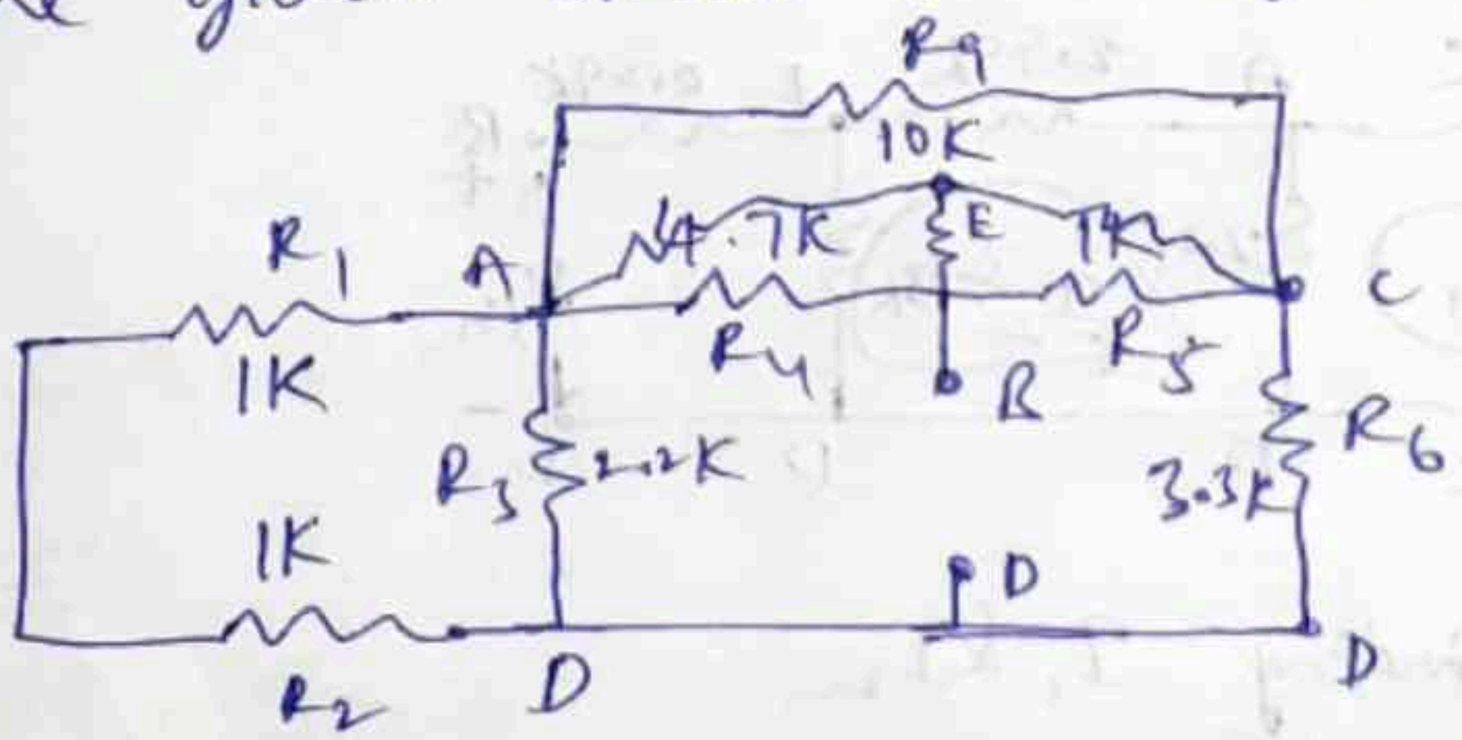

By convert Delta to star and minimise circuit

$$R_{AE} = \frac{4.7K \times 10K}{4.7 + 10K + 1K} = 2.99K\Omega$$

$$R_{BE} = 0.299K\Omega$$

$$R_{CE} = 0.64K\Omega$$

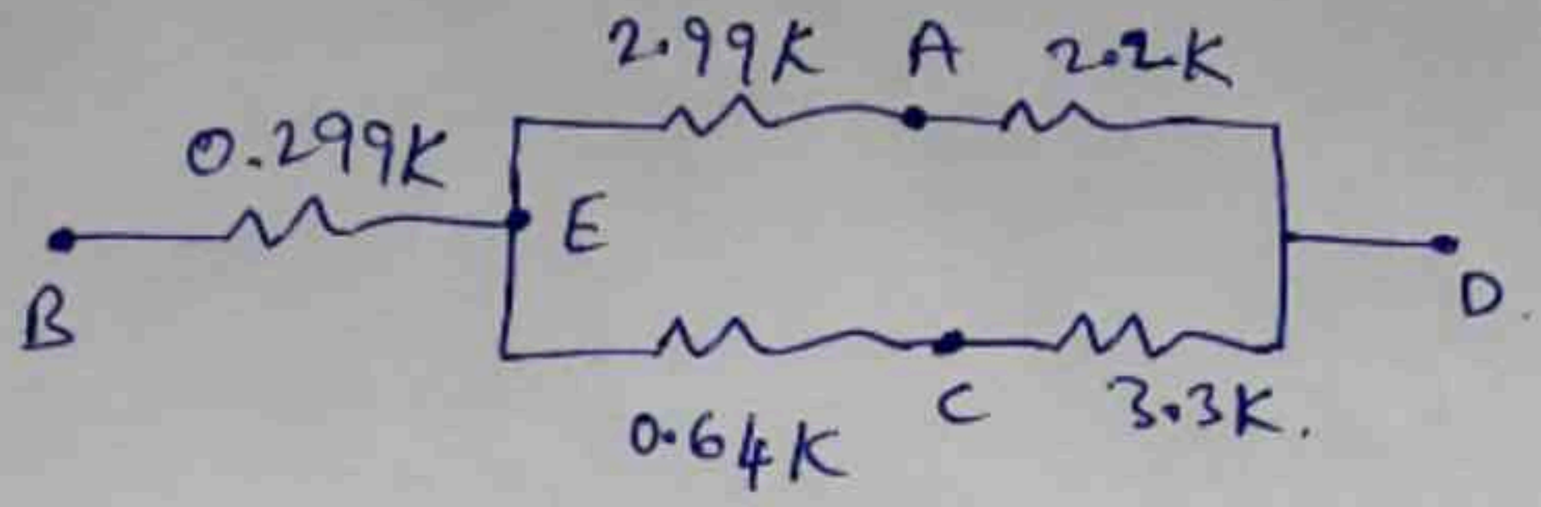

The equivalent Resistance, i.e., thevinen Resistance between B & D. is,

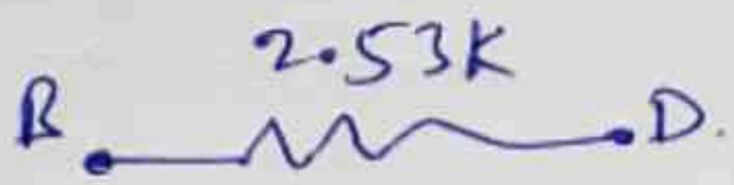

(b) $\boxed{\therefore R_{th} = R_{BD} = 2.53K\Omega}$

(d) Thevinen equivalent circuit is.

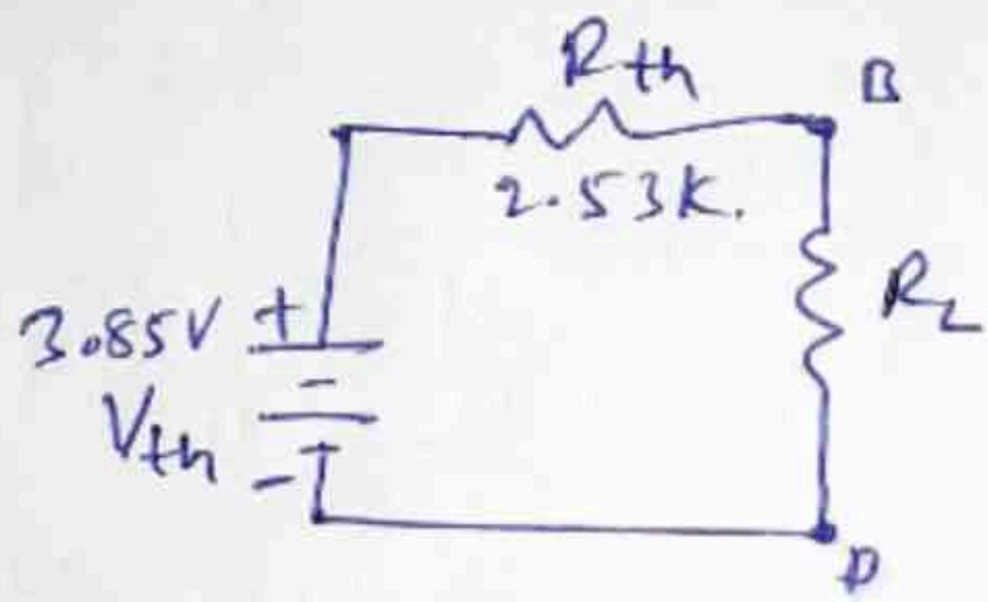

→ For Maximum power transmitting to the load, the load resistance (R_L) is equating to source resistance (R_{th}).

(e) $\boxed{\therefore R_L = R_{th} = 2.53K\Omega}$ → for Max Power.

Problem 2 (50 points)

Implement the following Op-Amp circuit on your project board:

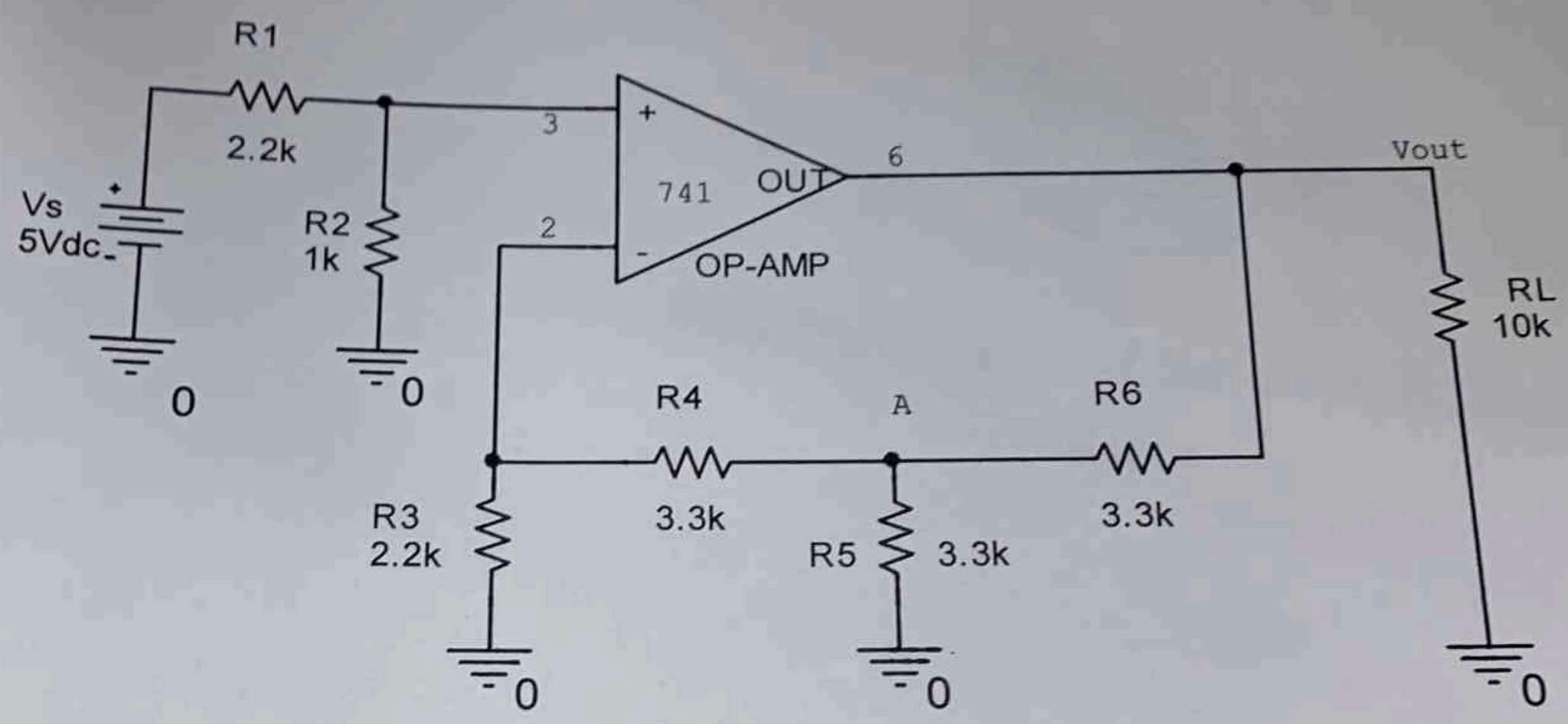

a. Measure the voltage at points A & Vout. (15 points)
b. Measure the current flowing in the load RL. (15 points)
c. Check your above answers by calculation. (20 points)

Note: Use +VCC= 14V at pin # 7 & -VCC= -14V at pin # 4.

Solution :- Let voltage at '+' terminal of op-amp and '-' terminal of opamp be V_3 and V_2 respectively.

Using voltage division principle, $V_3 = V_s \times \left(\frac{R_2}{R_1+R_2}\right)$

$$= 5V \times \left(\frac{1k}{1k+2.2k}\right)$$

$$= \underline{1.5625\,V}$$

Assuming ideal op-amp & concept of Virtual ground, $\underline{V_2 = V_3}$

Applying KCL at point '2',

$$\frac{V_2}{R_3} + \frac{V_2 - V_A}{R_4} = 0 \quad (\because \text{Assume voltage at point 'A' to be } V_A)$$

$$\Rightarrow \frac{1.5625}{2.2k} + \frac{1.5625 - V_A}{3.3k} = 0$$

$$\Rightarrow V_A = \frac{1.5625 \times 5.5k \times \cancel{3.3k}}{2.2k \times \cancel{3.3k}} = \underline{3.9\,V}$$

Applying KCL at point 'A',

$$\frac{V_2 - V_A}{R_4} = \frac{V_A}{R_5} + \frac{V_A - V_{out}}{R_6} \Rightarrow \frac{1.5625 - 3.9}{\cancel{3.3k}} = \frac{3.9}{\cancel{3.3k}} + \frac{3.9 - V_{out}}{\cancel{3.3k}}$$

$$\Rightarrow V_{out} = (3V_A - V_2) = \underline{10.1375\,V}$$

Current flowing in the load RL, $I_L = \left(\frac{V_{out}}{10k}\right) = \underline{1.01375\,mA}$