Student's Name: KEY

ID: _____

AMERICAN UNIVERSITY OF BEIRUT
DEPARTMENT OF ELECTRICAL AND COMPUTER ENGINEERING

EECE210 Electric Circuits

Midterm

Test ID: 0006

Summer 2008

DO NOT OPEN THE EXAM
READ THIS PAGE CAREFULLY

CLOSED BOOK
NO QUESTIONS
1.5 HOURS

Instructions:

- Programmable calculators are not allowed
- Provide your answers on the computer card only
- Return the computer card attached to the question sheet
- Mark with a **pencil** your name
- Mark your AUB ID number
- The test ID No. is your exam version. Mark it in the box titled "Test ID"
- Use pencil for marking your answers
- When using eraser, be sure that you have erased well
- When you finish the exam bring all of your belongings to the front of the room and hand in the exam. Then leave the room immediately.

Problem 1

Find R_{ab}.

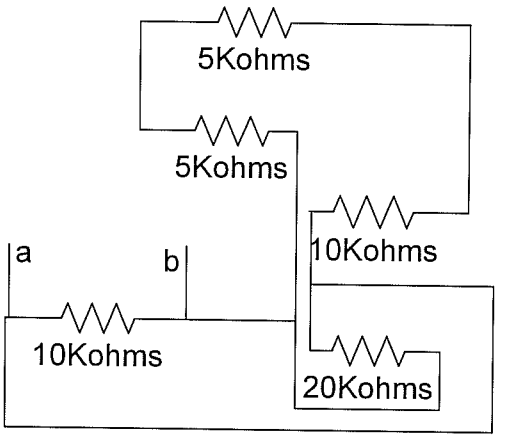

$(5k+5k+10k) \| 20k$

$10k \| 10k$

$5k$

A) 5 Kohms
B) 8 Kohms
C) 10 Kohms
D) 20 Kohms
E) None of the above

Problem 2

Find C_{ab}

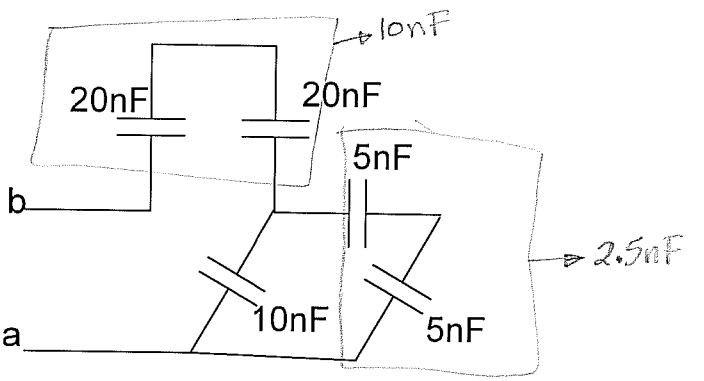

A) 2.55 nF
B) 5.55 nF
C) 10 nF
D) 45 nF
E) None of the above

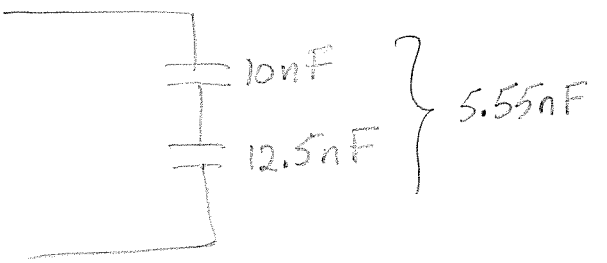

Problem 3

What should the value of R_L be to have maximum power transferred to it?

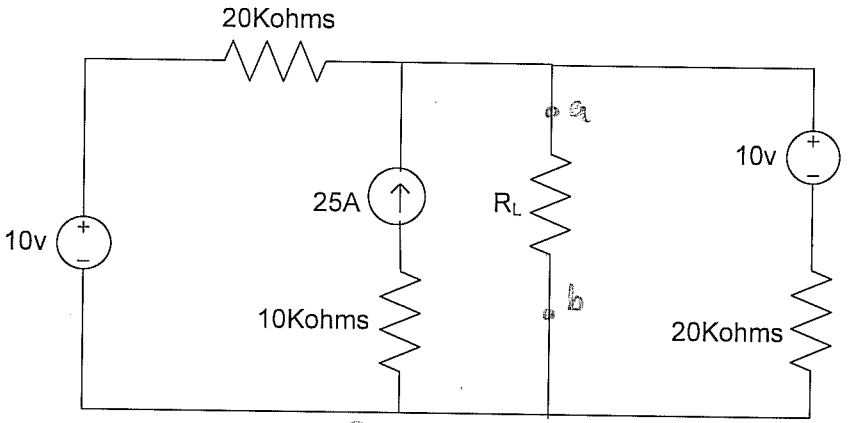

$R_L = R_{Th(ab)}$

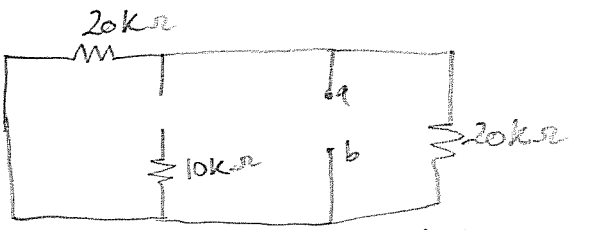

$20k \| 20k = 10k\Omega$

A) 2.5 Kohms
B) 5 Kohms
C) 10 Kohms
D) 40 Kohms
E) None of the above

Problem 4

Solve for V_0.

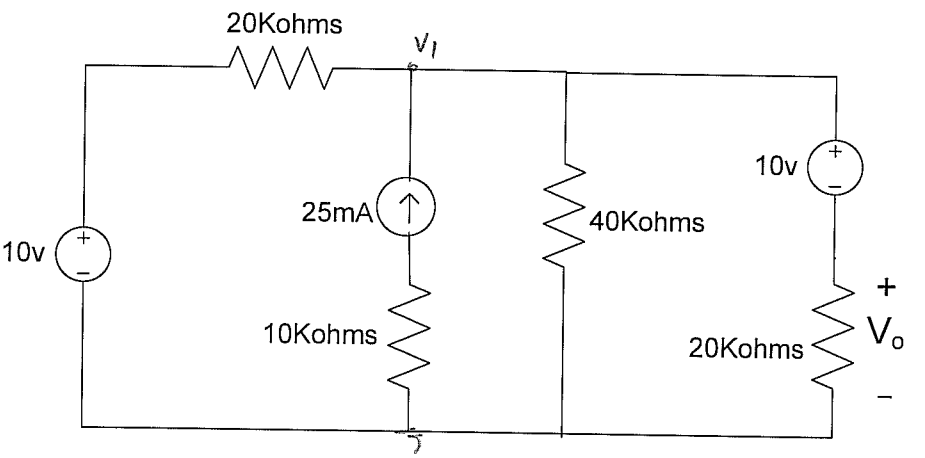

$$\frac{V_1 - 10}{20k} - 25mA + \frac{V_1}{40k} + \frac{V_1 - 10}{20k} = 0$$

$V_1 = 208$

$V_o = 208 - 10 = 198v$

A) 182 V
B) 198V
C) -192V
D) 208V
E) None of the above

Problem 5

What is the power associated with the current source?

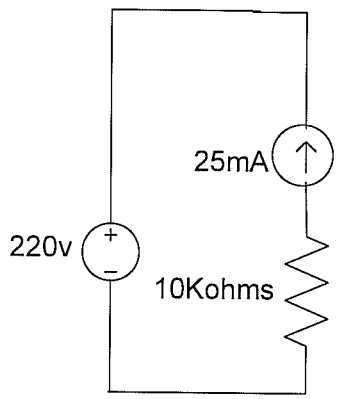

$P_R = i^2R = (25m)^2 \times 10k$
$= 6250\,mW$
$P_{220v} = +25m \times 220 = 5500\,m$
$P_{25mA} = -11.75\,W$

A) 5.50 W
B) -6.25 W
C) 10.55 W
D) -11.75 W
E) None of the above

Problem 6

What is the mesh current equation for mesh 1?

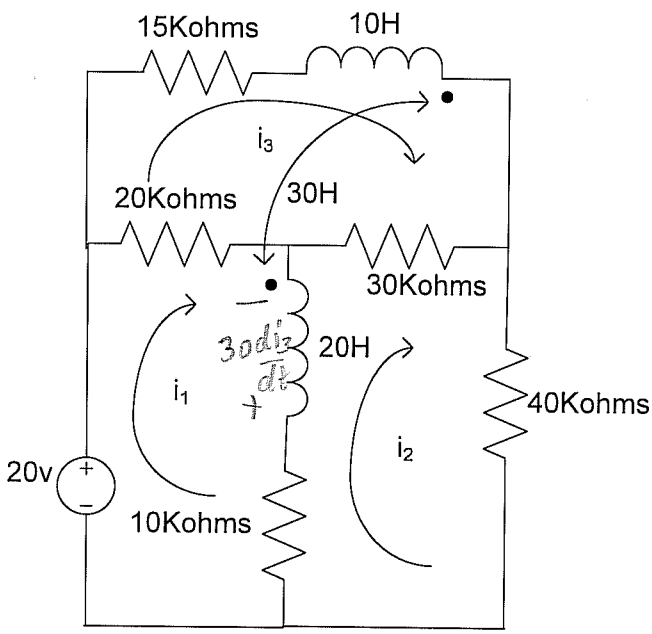

A) $-20+20K(i_1-i_3)+10K(i_1-i_2)+20\frac{d(i_1)}{dt}+30\frac{di_3}{dt}=0$

B) $-20+20K(i_1-i_3)+10K(i_1-i_2)+20\frac{d(i_1)}{dt}-30\frac{di_3}{dt}=0$

C) $-20+20K(i_1-i_3)+10K(i_1-i_2)+20\frac{d(i_1-i_2)}{dt}+30\frac{di_3}{dt}=0$

D) $-20+20K(i_1-i_3)+10K(i_1-i_2)+20\frac{d(i_1-i_2)}{dt}-30\frac{di_3}{dt}=0$

E) None of the above

Problem 7

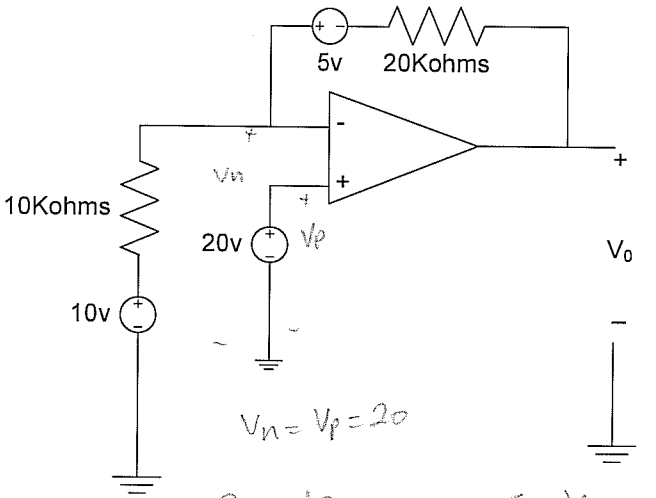

$V_n = V_p = 20$

What is the value of V_o?

$$\frac{20-10}{10k} + \frac{20-5-V_o}{20k} = 0$$

$V_o = 35V$

A) 35 V
B) 40 V
C) 45 V
D) 50 V
E) None of the above

Problem 8

Assume all currents and voltages in the circuit reached a constant value. What is the value of i_R?

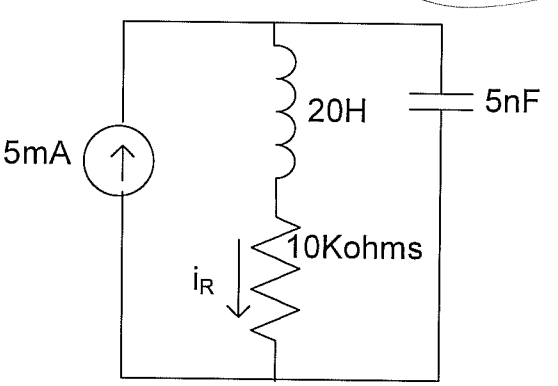

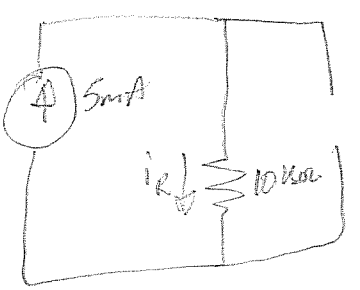

A) 0 A
B) 5 mA
C) 5 A
D) 50 A
E) None of the above

Problem 9

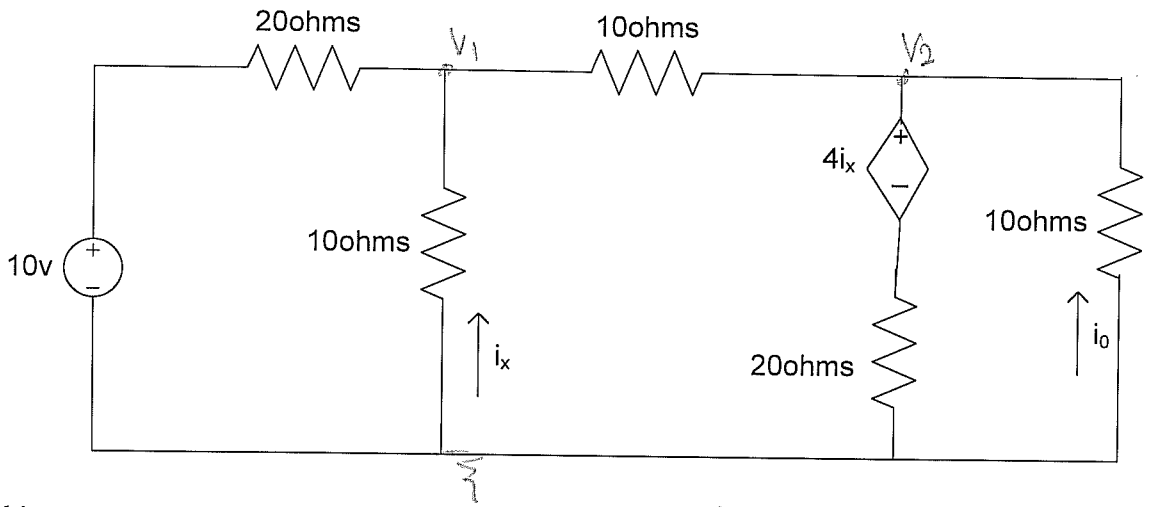

Find i_0.

$$\frac{V_1-10}{20}+\frac{V_1}{10}+\frac{V_1-V_2}{10}=0$$

$$\frac{V_2-V_1}{10}+\frac{V_2-4i_x}{20}+\frac{V_2}{10}=0$$

$$V_1=-10i_x$$

$$V_2=-10i_0$$

A) 7.339 mA
B) -7.339 mA
C) 73.39 mA
D) -73.39 mA
E) None of the above

Problem 10

Find the Thevenin voltage across terminals a (+) and b (-).

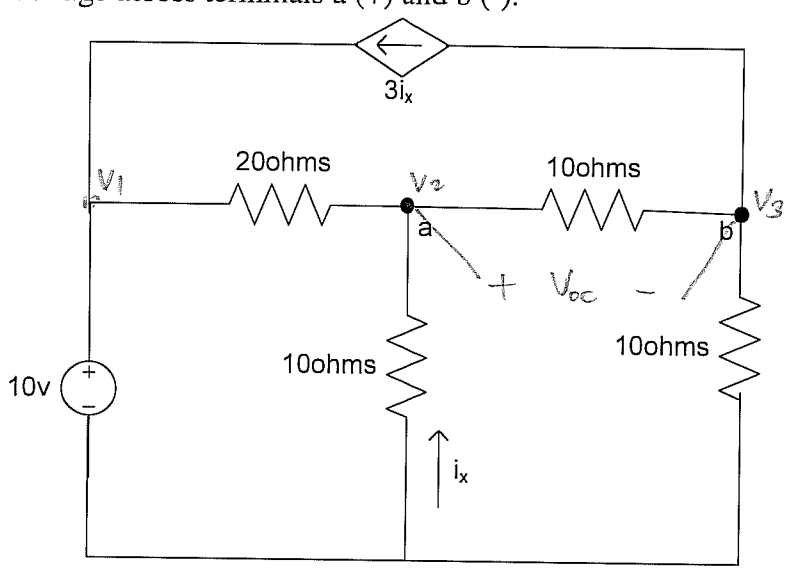

A) 10 V
B) 20 V
C) -10 V
D) -20 V
E) None of the above

$$V_1=10$$

$$\frac{V_2-V_1}{20}+\frac{V_2}{10}+\frac{V_2-V_3}{10}=0$$

$$\frac{V_3-V_2}{10}+3i_x+\frac{V_3}{10}=0$$

$$V_2=-10i_x$$

$$V_{oc}=V_2-V_3$$

Problem 11

Find Thevenin resistance across terminals a and b.

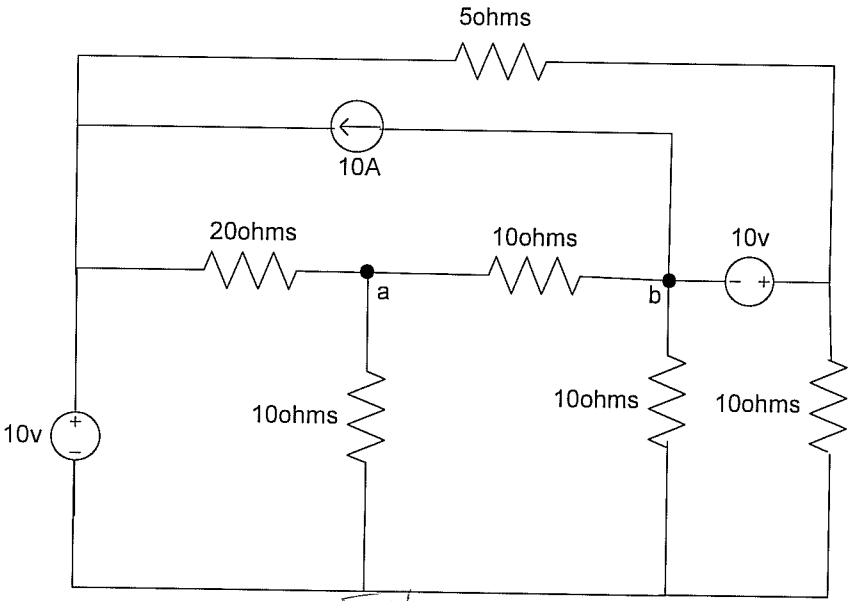

A) 0 ohms
B) 19.16 ohms
C) 5.38 ohms
D) 4.78 ohms
E) None of the above.

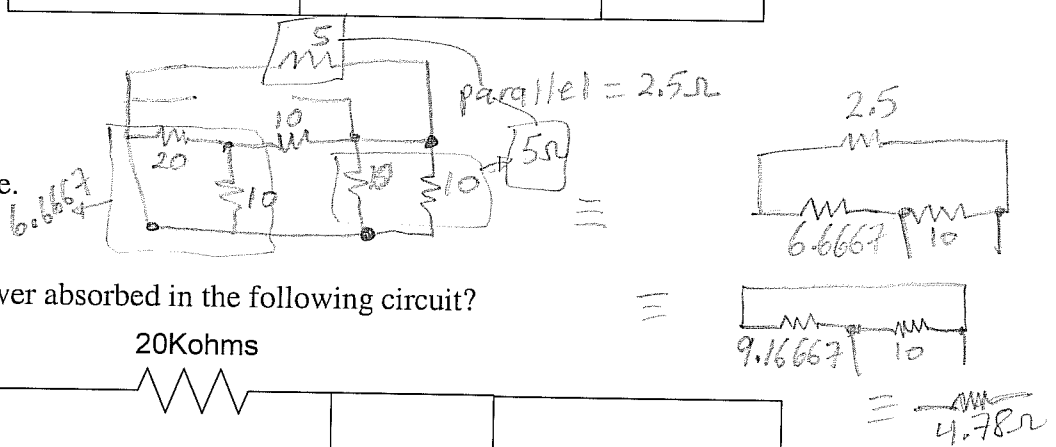

Problem 12

What is the total power absorbed in the following circuit?

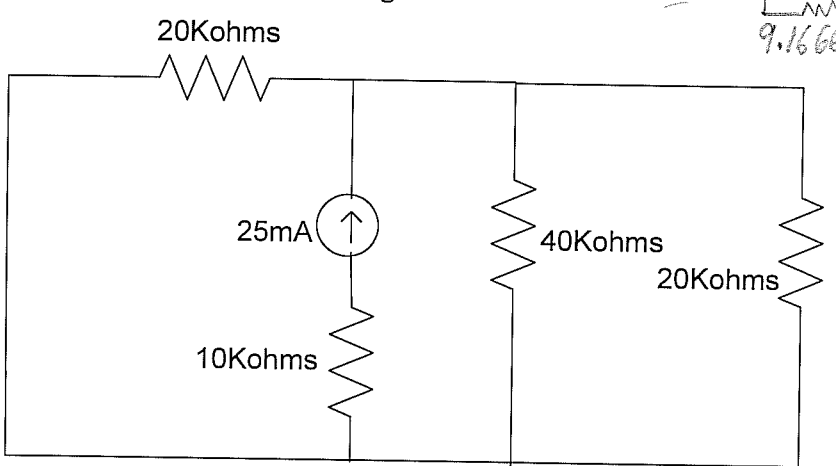

$20k \parallel 20k = 10k \parallel 40k = 8k\Omega$

A) 11.25 W
B) 5.55 W
C) 0.45 W
D) 0.225 W
E) None of the above

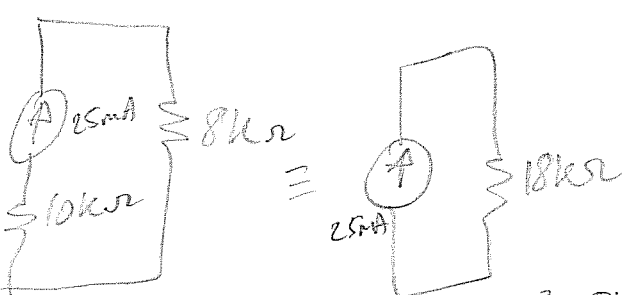

$P_A = i^2 R = (25m)^2\, 18k$
$= 11.25W$