Prof. R. Chedid
K. Kabalan
F. Karameh
I. El-Haj

FACULTY OF ENGINEERING
& ARCHITECTURE
DEPARTMENT OF ELECTRICAL
& COMPUTER ENGINEERING

FALL TERM 2007-08

Key

QUIZ #1

Nov. 15, 2007

Name:.....
ID:.....
Professor:.....

V. 1

(EECE 210) ELECTRIC CIRCUITS

CLOSED BOOK (1 ½ HRS)

1. Programmable Calculators are not allowed
2. Provide your answers on the computer's card only
3. Return the computer's card attached to the question sheet
4. Mark with a pencil your last name.
5. Mark your AUB ID NO.
6. The test ID No. is your exam version. Mark it in the box titled ' Test ID".
7. Use pencil for marking your answers
8. When using eraser, be sure that you have erased well

Problem 1

Find the maximum power that can be transferred to R_L.

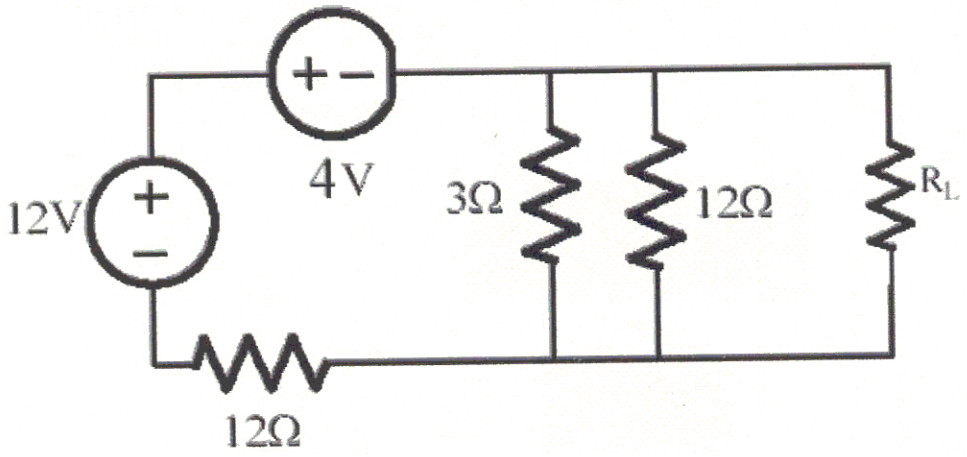

a. 0.6666 W
b. 0.2222 W
c. 0.6530 W
d. 0.8888 W
e. None of the above

Problem 2

Find i_0 and v_0 in the circuit shown below

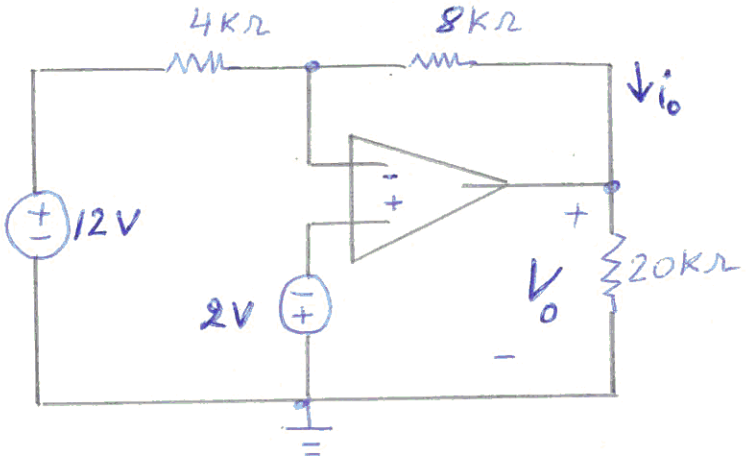

a. + 7.5 V, + 3/8 mA
b. -26 V, -3.5 mA
c. + 30 V , + 3.5 mA
d. -30 V, +3.5 mA
e. None of the above

Problem 3

Find the current i_1 in the circuit shown below

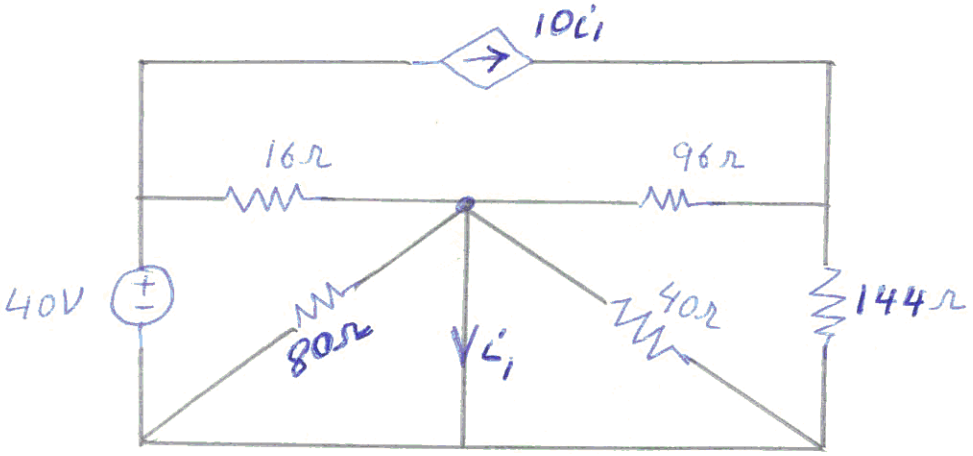

a. -7.5 A
b. -0.5 A
c. 2.5 A
d. 3 A
e. None of the above

Problem 4

Solve for I_x

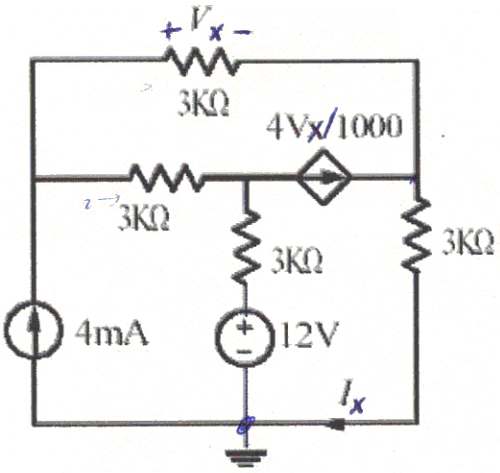

a. 5.57 mA
b. 1.857 mA
c. -1.857 mA
d. -5.57 mA
e. None of the above

Problem 5

Find R_{AB} the equivalent resistance between terminals A and B.

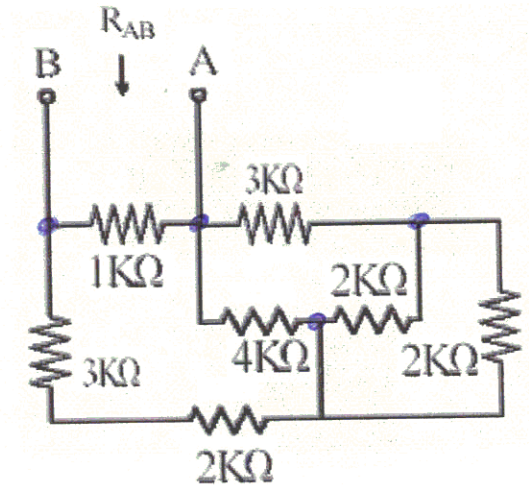

a. 0.875 KΩ
b. 0.588 KΩ
c. 0.982 KΩ
d. 8 KΩ
e. None of the above

Problem 6

Find i_x in the circuit shown below

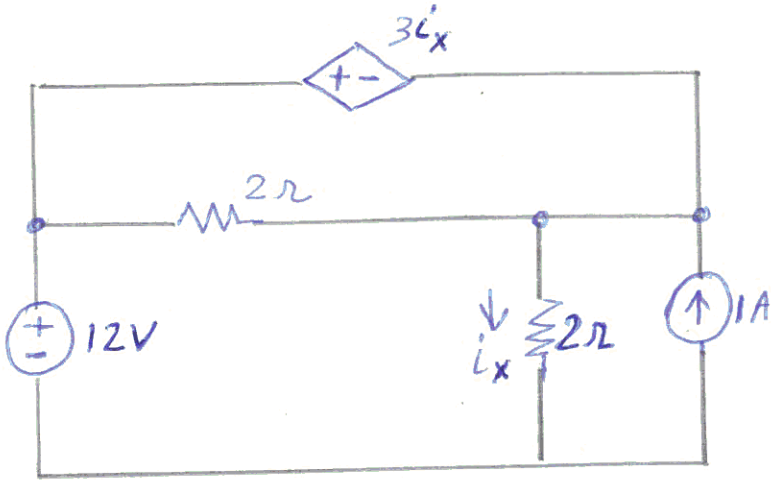

a. 1.2 A
b. 2.4 A
c. -2.4 A
d. -12 A
e. None of the above

Problem 7

For the circuit shown below, find R_{eq} if the voltage V_{ab}=40 Volts

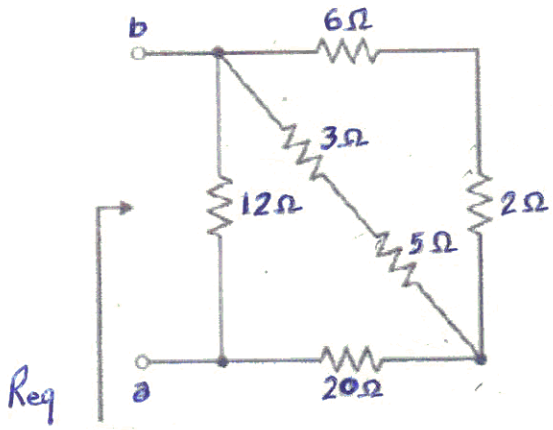

a. 24 Ω
b. 30 Ω
c. 8 Ω
d. 12 Ω
e. None of the above

Problem 8

For the circuit shown below, determine the voltage at node b.

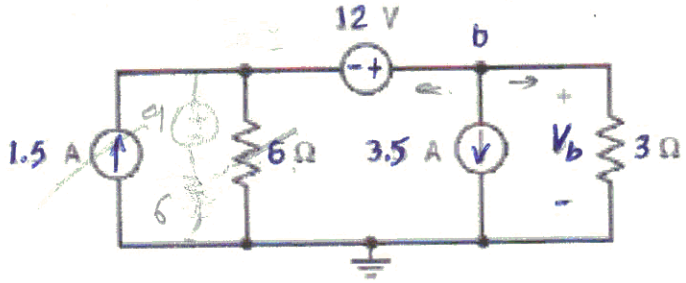

-V

a. -12 Volts
b. 0 Volts
c. 4 Volts
d. 6 Volts
e. None of the above

Problem 9

Find V_{ab} in the circuit shown below

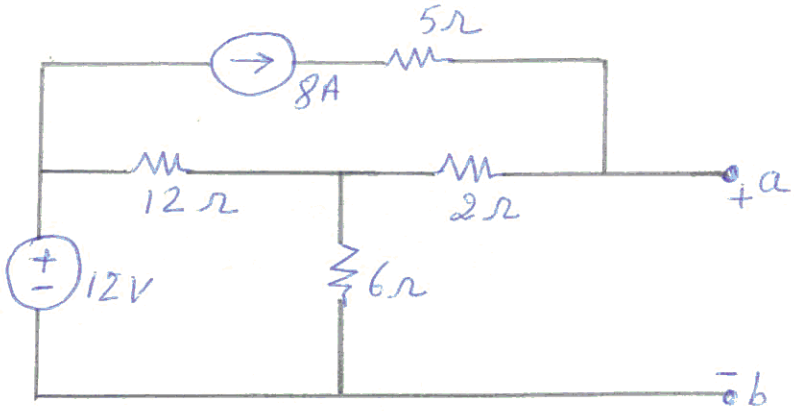

a. 52 Volts
b. 16 Volts
c. 28 Volts
d. 36 Volts
e. None of the above

Problem 10

In the circuit shown below, solve for V_0

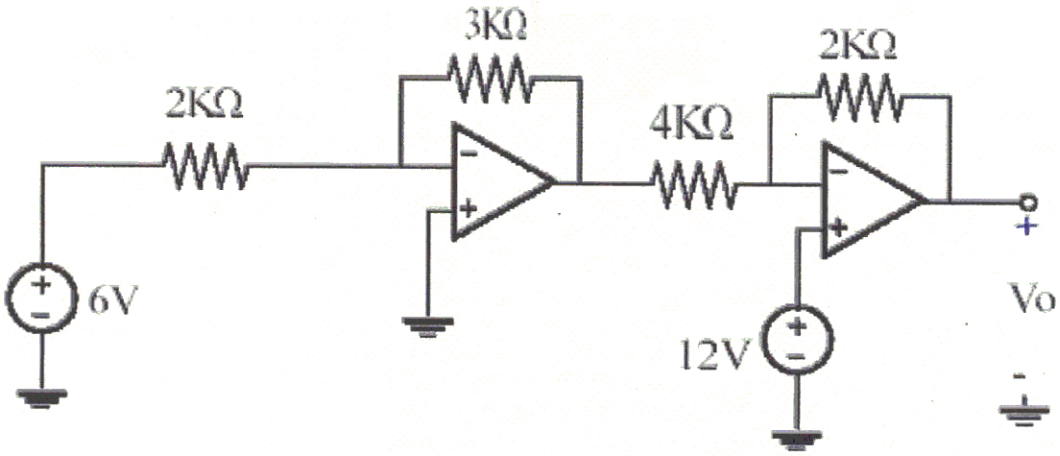

a. 12 V
b. 22.5 V
c. 13.5 V
d. 1.5 V
e. None of the above

Problem 11

Find Thevenin Equivalent across the terminals a and b on the figure shown below

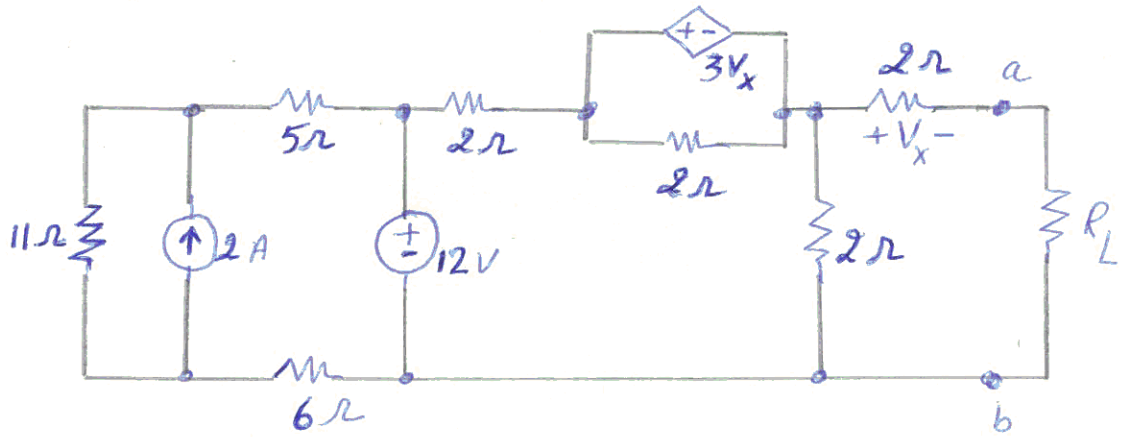

a. Vth = 3 V
b. Vth = 6 V
c. Vth = 4 V
d. Vth = 4 V
e. None of the above

Problem 12

Given the circuit of an ideal operation amplifier.
Determine V_O assuming $V_S = 10$ V.

A. +5 V
B. -5 V
C. +10 V
D. -10 V
E. None of the above

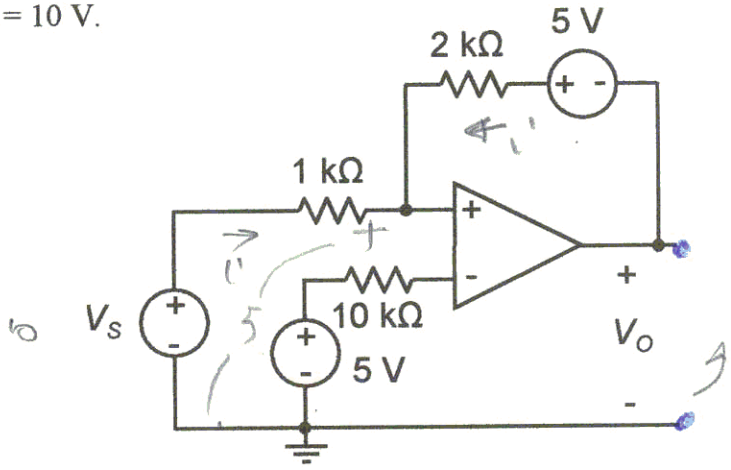

$i = \frac{5}{2000} = 5\,mA$

$-V_o - 5 + 2000\,i + 5 = 0$

$V_o = 2000 \times 5\,mA = 10$