Fall 2011

Experiment 11

Bipolar Junction Transistor

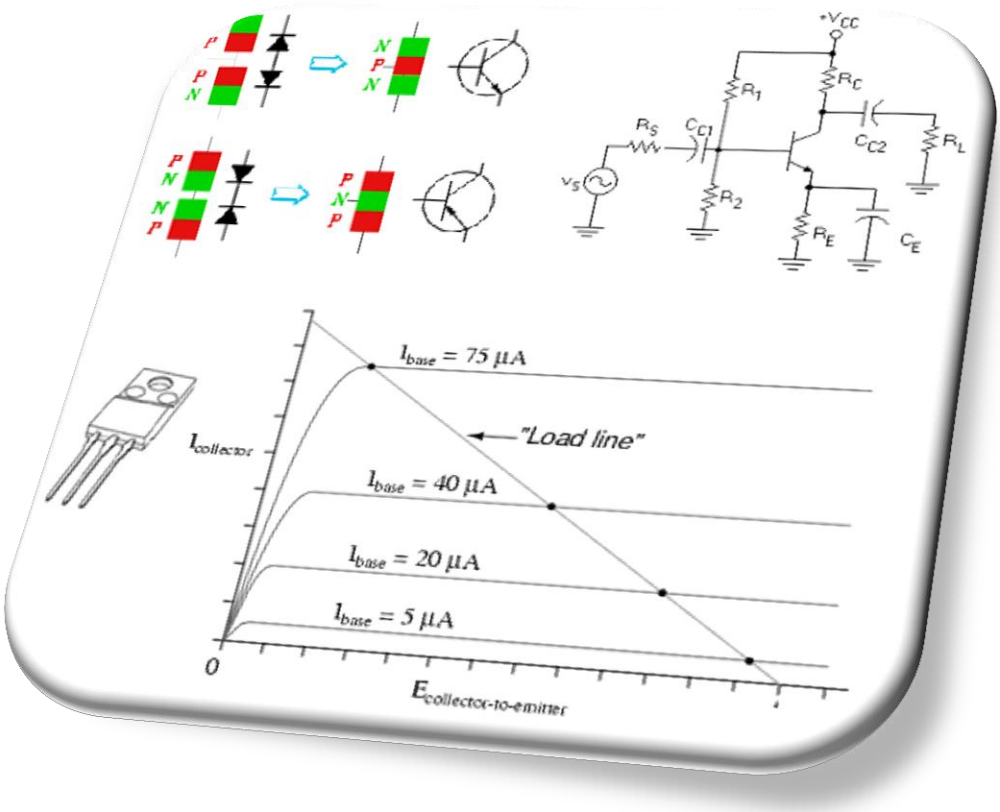

Table of Contents

I. OBJECTIVES

In this experiment you will investigate the characteristics of the bipolar junction transistor (BJT) and study its application as:

- Logic inverter and switch
- Amplifier
- Current source

II. MATERIAL AND PROCEDURE

A. BJT CHARACTERISTICS

- Connect the circuit shown in Fig. A-1. We will use this circuit to study the characteristics of the 2N2222 bipolar junction transistor and its different regions of operation.

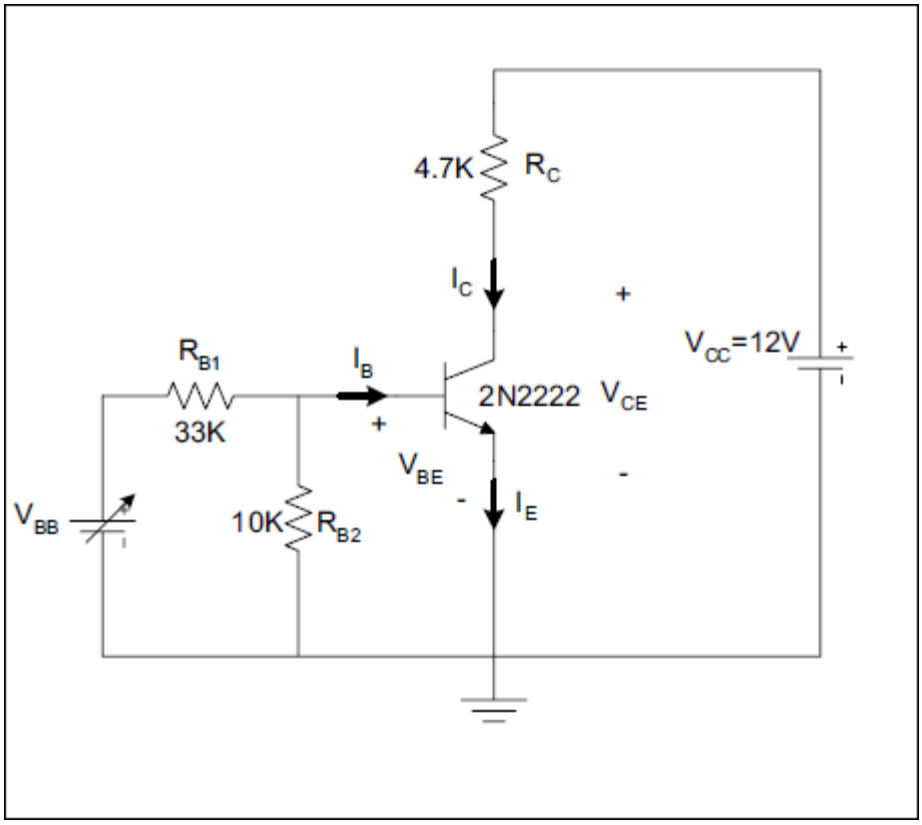

Figure A-1: BJT Circuit

- Starting with V_{BB} = 1 V, increase V_{BB} to 8 V in steps of 0.2 V, while measuring the collector current I_C, the base current I_B, the collector-to-emitter voltage V_{CE}, and the base-to-emitter voltage V_{BE}.

  Note: When the collector current starts to increase quickly, reduce the step size of V_{BB} to 0.1 V. When the collector current saturates, change the step size back to 0.2 V.

- Complete TABLE A-1.

V_{BB} (Volt)	I_C	I_B	I_C / I_B	V_{CE}	V_{BE}

Table A-1: BJT characteristics

Discussion on Part A

- At what value does the collector current saturate? We will refer to this value as $I_{C(SAT)}$.

  This value of collector current will be used to define the boundaries of the different regions of operation of the BJT: cutoff, active, and saturation. We will assume that the transistor is practically OFF (in the cutoff region) when its collector current is less than $I_{C(SAT)}/100 = 0.01I_{C(SAT)}$, and that it is at the edge of saturation when the collector current reaches $0.99I_{C(SAT)}$. Between these two points, the BJT is in the active region.

Discussion on Part A cont'd

- Find the two values of V_{BE} that correspond to the edge of conduction (I_C is $0.01I_{C(SAT)}$) and the edge of saturation ($I_C = 0.99I_{C(SAT)}$).
  - What is the range of values of V_{BE} in the active region?
  - VBE is usually assumed constant in the active region. Is this assumption justified? If so, what constant value would you use for the BJT in this experiment?
- Consider the ratio I_C/I_B in the active region. This ratio is β (beta) of the BJT.
  - Plot the variation of β with I_C in the active region.
  - β is usually assumed constant in the active region. Is this assumption justified? If so, what constant value would you use for the BJT in this experiment?
- Find the range of values of V_{BE} and V_{CE} in the saturation region.
  - V_{BE} and V_{CE} are usually assumed constant in the saturation region. Is this assumption justified? If so, what constant values would you use for the BJT in this experiment?
  - Consider the ratio I_C/I_B in the saturation region. How

B. BJT AS A SWITCH

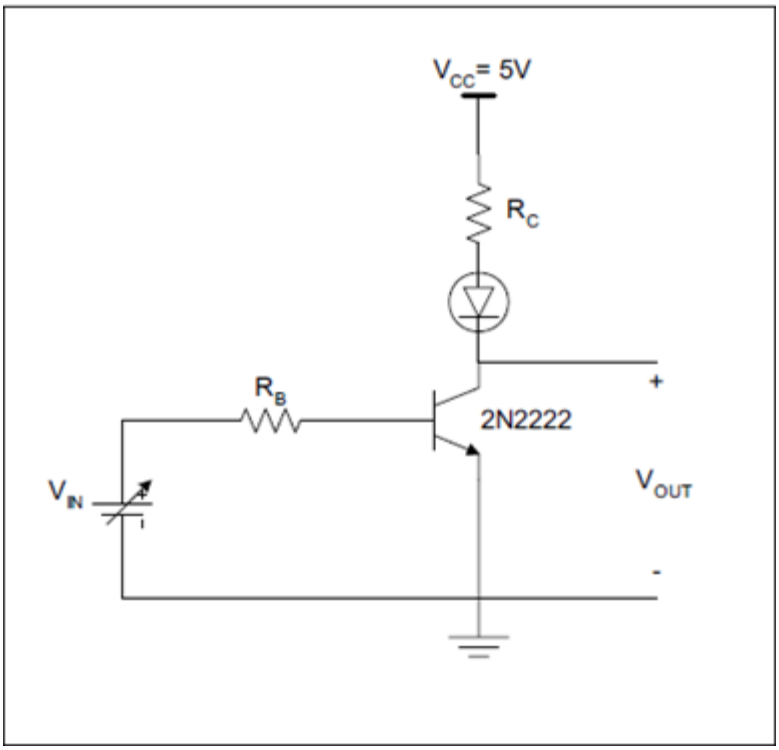

Figure B-1: BJT as a switch

- Given the average value of β for the BJT under test in part A, design the circuit in Fig.B-1, (find the values of R_C and R_B) in order to meet the following specification:
    - When V_{IN} is 5 V, the transistor is fully saturated with $I_C/I_B = \beta/10$ and the LED current is 10 mA. Assume That the LED forward voltage is 2 V.

Show your design to the Lab Instructor before connecting the circuit.

- Vary V_{IN} from 0 V to 2 V in steps of 0.2 V and measure V_{OUT}. Increase V_{IN} from 2 V to 5 V in steps of 0.5 V and measure V_{OUT}. Also, note the value of V_{IN} at which the LED starts glowing. Complete TABLE B-1.

V_{IN} (Volt)	V_{OUT} (Volt)	LED ON (Yes/No)
0		
0.2		
0.4		
0.6		
0.8		
1		
1.2		
1.4		
1.6		
1.8		
2		
2.5		
3		
3.5		
4		
4.5		
5		

Table B-1: BJT as a switch

Exercise

- Refer to in-lab 11 exercise B-1

Discussion on Part B

- Plot V_{OUT} versus V_{IN}. Note the inverter action: when V_{IN} is low, V_{OUT} is high, and when V_{IN} is high, V_{OUT} is low.
  - For this BJT inverter, what are the values of the low voltage and the high voltage?
  - In what region is the BJT operating when the input is low and when the input is high?
  - At what value of V_{IN} does the inverter switch output states?

C. BJT AS AN AMPLIFIER

In the circuit of Figure C-1, the voltage source is a 100 mV peak-to-peak, 10KHz sine signal. The voltage gain v_O/v_S is less than 1.

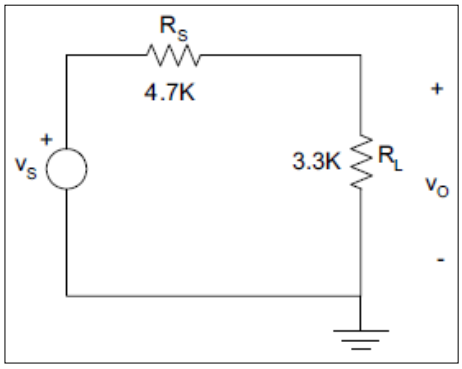

Figure C-1: circuit diagram

Note: Even though the ratio v_O/v_S is less than 1, we still refer to it as gain. When we connect the BJT amplifier block, the ratio will become much larger than 1.

If we increase the amplitude of the input signal or change the frequency (50Hz to 1MHz) and measure the ratio v_O/v_S we note that it is still unchanged.

We will now insert an amplifier stage between the source and the load, and investigate its effects and limitations.

The circuit is shown in Fig. C-2, and the details of the amplifier implementation are shown inside the dotted block of Fig. C-3.

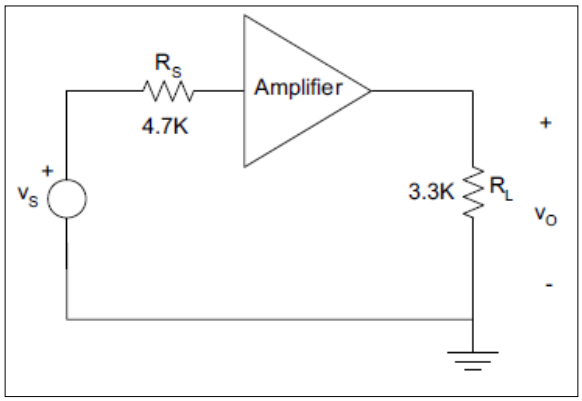

Figure C-2: Circuit diagram with Amplifier

- Connect the circuit shown inside the dotted block of Fig. C-3.

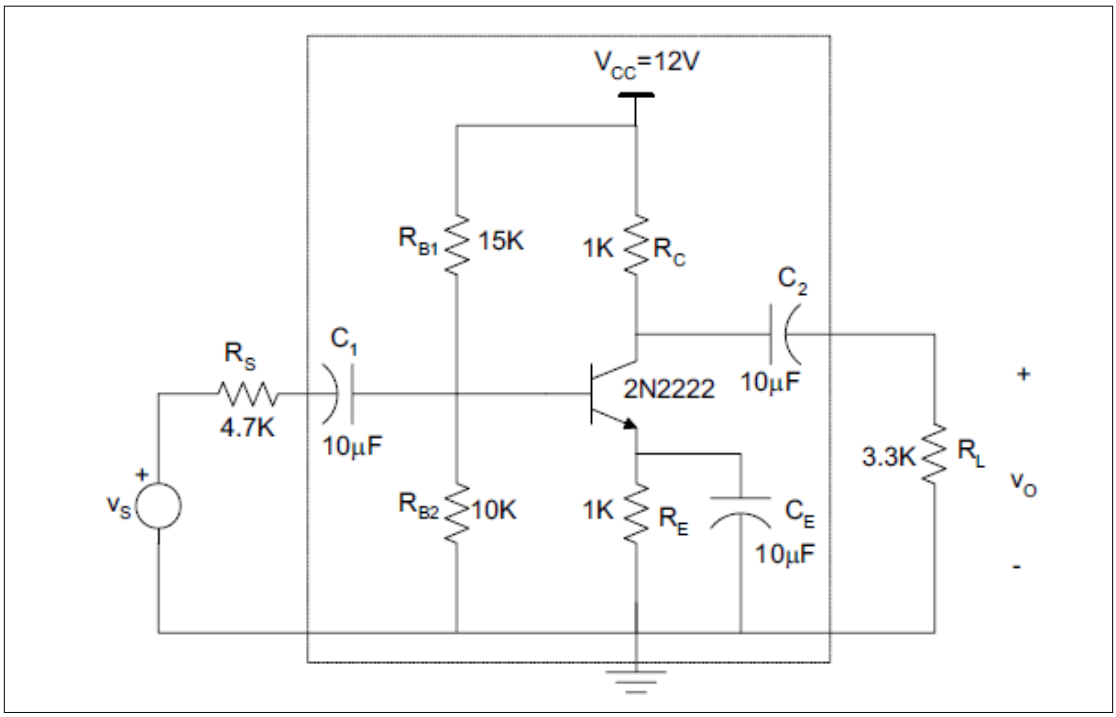

Figure C-3: Complete circuit with detialed amplifier

C1. DC ANALYSIS

- Measure the DC values of I_C, I_B, V_{BE}, and V_{CE}.
- Verify that the BJT is operating the active region.

Note *The BJT* must *be in the active region to use it as an amplifier.*

Exercise • Refer to in-lab 11 exercise C-1

C2. VOLTAGE AND CURRENT GAIN

- Connect the input signal source and the load resistor to the BJT circuit, and observe the polarities of the coupling capacitors.
- Apply a 100 mV peak-to-peak, 10 KHz sine signal as the input source.
- Measure the output voltage, and find the voltage gain, current gain, and power gain.

Exercise • Refer to in-lab 11 exercise C-2

C3. BANDWIDTH

Find the bandwidth of the amplifier, defined as f_2 - f_1 where f_1 and f_2 are the frequencies at which the voltage gain of the amplifier is 0.7071 times its value at mid frequencies, with f_1 being the low frequency value, and f_2 the high frequency value.

Exercise • Refer to in-lab 11 exercise C-3

C4. INPUT AMPLITUDE INCREASE

Increase the amplitude of the input signal to more than 150 mV (300 mV peak-to-peak), and note how the shape of the output signal changes and becomes distorted.

Discussion on Part C

- The power gain in the circuit of Fig. C-3 is much larger than 1; the power dissipated in the load is much larger than the power supplied by the input signal. This seems to imply that we have an efficiency which is much larger than 1!

  Explain how the amplifier can provide this power gain, and show that the actual efficiency is less (and in some cases much less) than 1.

- When the BJT amplifier block was not connected, the bandwidth was much larger than that when we used the amplifier block. Explain what limits the bandwidth of the amplifier.
  - What causes the gain to drop at low frequencies?
  - What causes the gain to drop at high frequencies?

Discussion on Part B cont'd

- When the BJT amplifier block was not connected, the output voltage did not show any distortion even when the input amplitude became large. This is not the case when the amplifier block is connected. Explain why.
    - What are the drawbacks of distortion in the output signal?

D. BJT AS A CURRENT SOURCE

- Connect the circuit shown in Fig. D-1. Start with $R_C = 0$ (short circuit). Measure the base voltage and the emitter voltage. Also measure off-circuit the value of the 4.7 K emitter resistor.

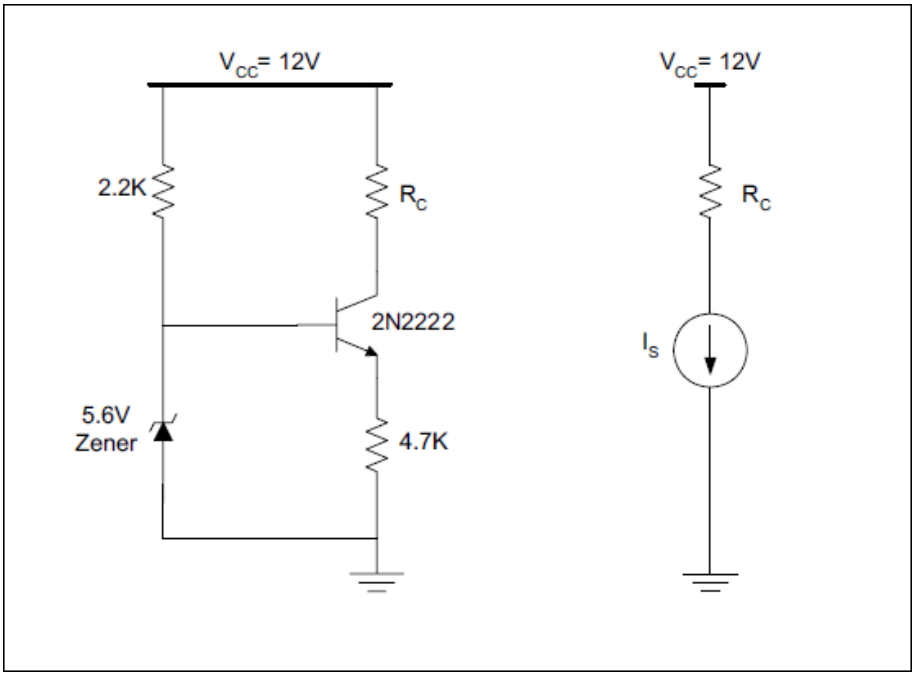

Figure D-1: (a) BJT as a current source, (b) equivalent circuit

- Increase the value of R_C from 0 to 12 KΩ using 1 KΩ, 1.5 KΩ, 2.2 KΩ, 2.7 KΩ, 3.3 KΩ, 4.7 KΩ, 5.6 KΩ, 6.8 KΩ, 8.2 KΩ, 10 KΩ, and 12 KΩ resistors, and measure the collector current of the transistor and the collector-to-emitter voltage. Complete TABLE D-1.

R_C (measured, in KΩ)	I_C (mA)	V_{CE} (Volt)
0		
1		
1.5		
2.2		
2.7		
3.3		
4.7		
5.6		
6.8		
8.2		
10		
12		

Table D-1: BJT as a current source

Exercise

- Refer to in-lab 11 exercise D-1

Discussion on Part D

- Plot I_C as a function of R_C.
  - For what range of values of R_C is the current constant?
  - Note that for this range of R_C, the circuit in Fig. D-1(A) is equivalent to the circuit shown in Fig. D-2(B). The transistor behaves as a current source. What is the value of the current source I_S?
  - Given the value of the Zener voltage, which was measured at the base of the transistor, and the approximate values for V_{BE} and β calculated in part A, what is the calculated value of I_S? How does it compare with the measured value?
- Plot I_C as a function of V_{CE}.
  - For what range of V_{CE} is the current in the collector constant? What does this range of V_{CE} correspond to?

III. OUTCOMES

By the end of Experiment XI, students:

- Are able to compute and calculate the characteristics of BJT in different regions.
- Should understand the different application of BJTs; logic inverter, amplifier, and current source