EECE 491: Discrete-time Signal Processing

Mohammad M. Mansour
Dept. of Electrical and Compute Engineering
American University of Beirut

Lecture 12: Digital Processing of Analog Signals:
Oversampling and Noise Shaping

Announcements

- **Final Exam:**
  - Friday April 29
  - 8:00-11:00am
  - IOEC 224

- **Reading**
  - O&S
    - Chapter 4

Filtering of CT Signals

- **Idealized filtering of C.T. signals using discrete-time filter**
  - CT signal is band-limited
  - Ideal C/D converter
  - Ideal bandlimited interpolator D/C

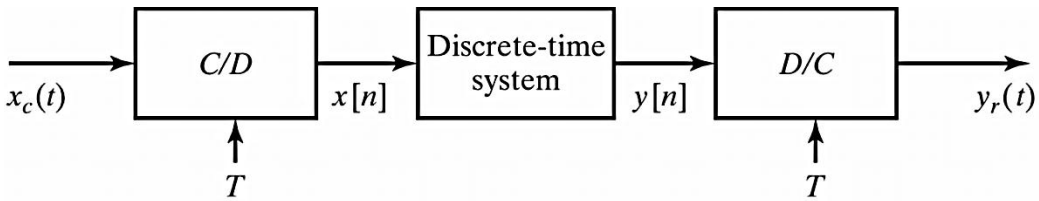

- **Practical setting:**
  - CT signal is not band-limited
  - C/D and D/C are approximated by devices called A/D and D/A

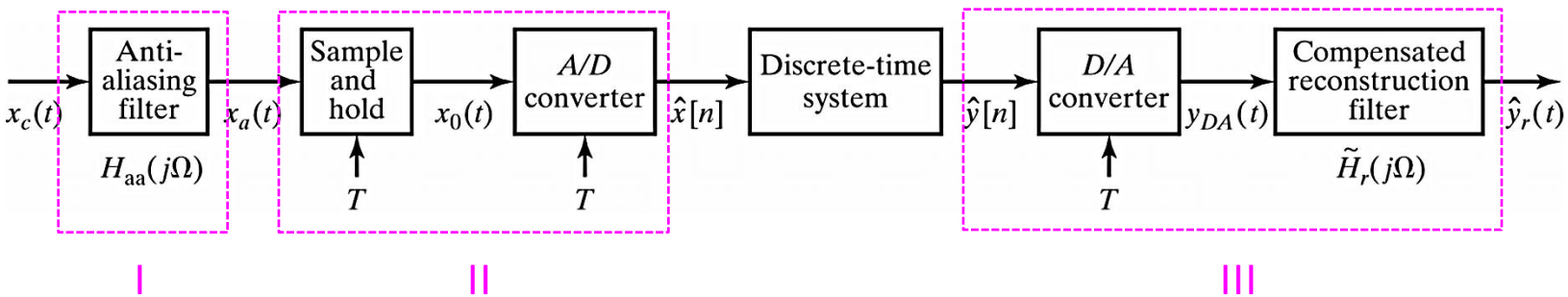

(I) Prefiltering to Avoid Aliasing

- **To keep amount of arithmetic processing minimal, keep sampling rate low**

- **If input is not band-limited or the Nyquist rate is high, prefiltering is needed**
  - Ex: Speech signals can have content up to 20kHz; they are prefiltered down to ~4kHz

- **Even if input is bandlimited, wideband additive noise fills higher frequency range**
  - With aliasing as a result of sampling, these noise components would alias into low frequency band. So Prefiltering is needed

- **Anti-aliasing filter $H_{aa}(j\,\Omega)$**
  - Analog LPF with cutoff frequency $|\Omega_c| \leq \pi/T$.
  - Cannot be ideally bandlimited, but can be made small for $|\Omega_c| > \pi/T$.
  - Very expensive to implement sharp-cutoff filter in analog domain

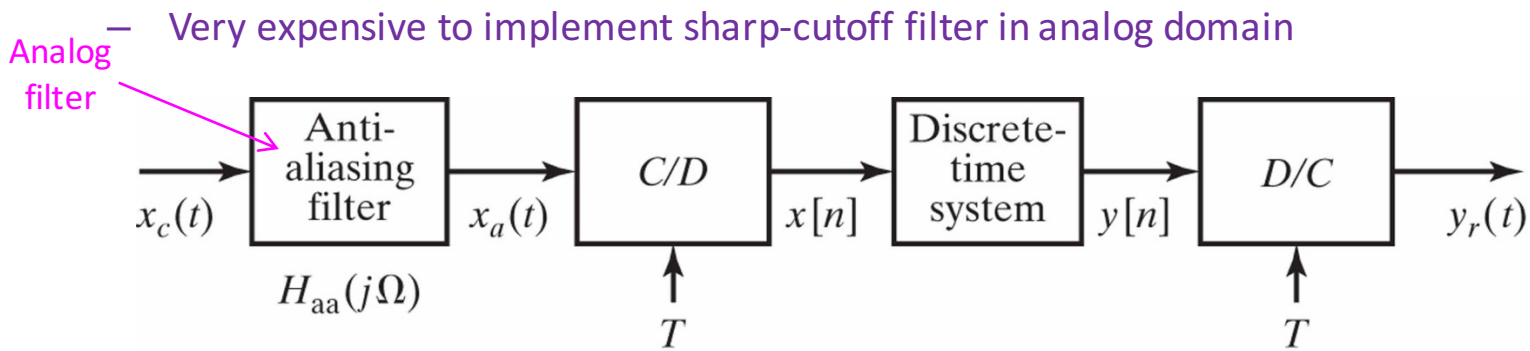

(I) Oversampled A/D Conversion to Simplify Prefiltering

- **One approach to simplify requirements on analog prefilter is to use *oversampling***
- **Assume Ω_N is highest frequency component to be eventually retained after antialiasing filtering is completed**
  - Use a very "**simple**" analog $H_{aa}(j\,\Omega)$ with "**gradual roll-off**", having significant attenuation at frequency $M\,\Omega_N$ for some M.
  - Implement C/D conversion at a sampling rate higher than $2\Omega_N$, say $2M\,\Omega_N$.
  - Then do sample rate reduction by M using a decimator that includes a sharp anti-aliasing filter in **discrete-time domain**.
  - Subsequent DT processing can then be done at the low-sampling rate to minimize computational overhead

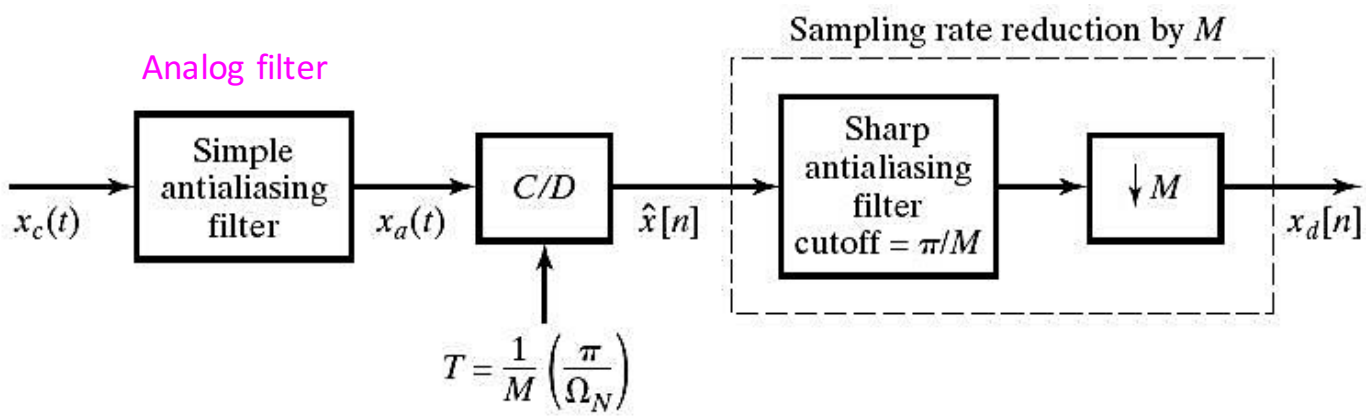

(I) Oversampled A/D Conversion: Example

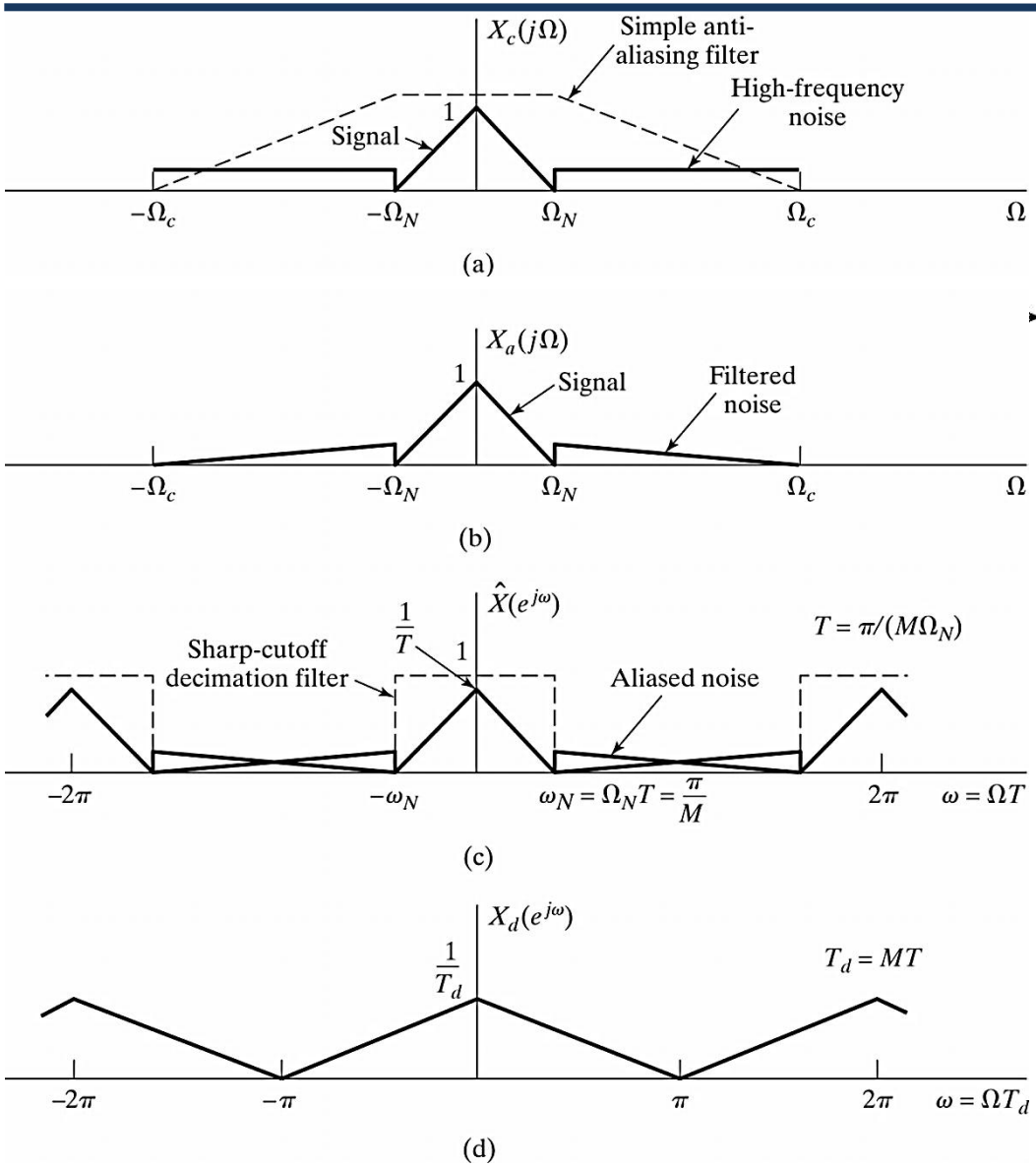

Simple $H_{aa}(j\Omega)$ filters noise up to Ω_c.

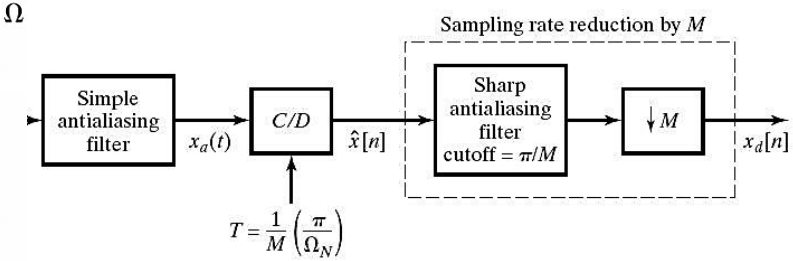

$x_a(t)$ is sampled with period T such that $(2\pi / T - \Omega_c) \geq \Omega_N$

← ***Note frequency axis scaling***

← ***Note frequency axis scaling***

(II) A/D Conversion

- **A/D converter approximates an ideal C/D**
  - Implemented using integrated circuits. Generate a binary number representing the voltage or current at the input every *T* seconds
  - Process not instantaneous. Needs a sample-and-hold circuit

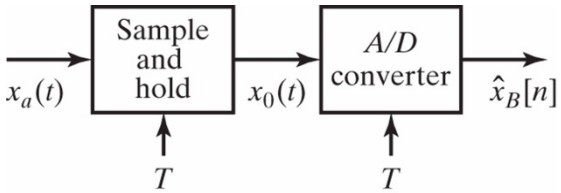

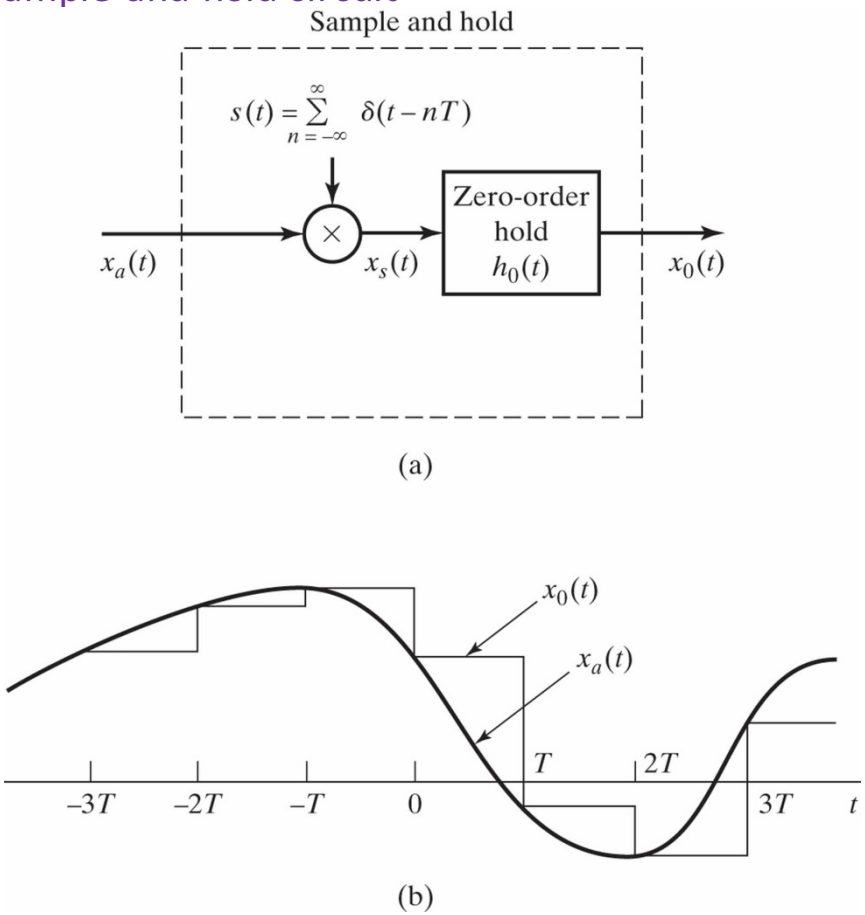

(II) A/D Conversion

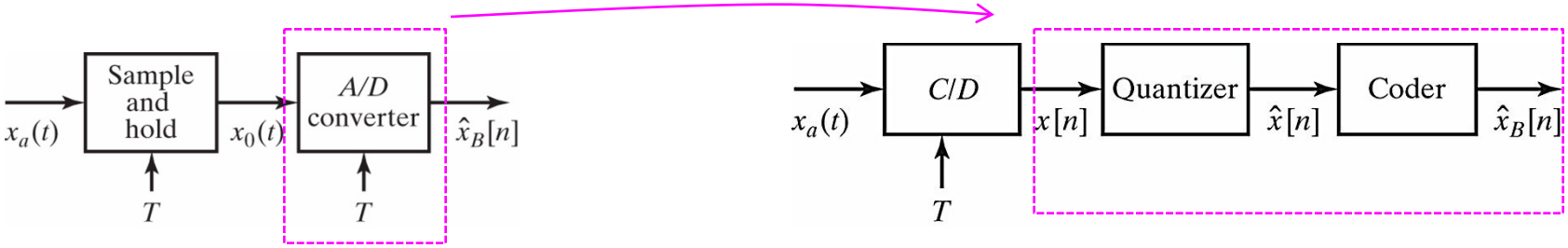

A/D converter then quantizes analog value and generates a B-bit binary number

(B+1) bits

Step size

$$\Delta = \frac{2X_m}{2^{B+1}}$$

$$-1 \le \hat{x}_B[n] < 1$$

$$\hat{x}[n] = X_m \hat{x}_B[n]$$

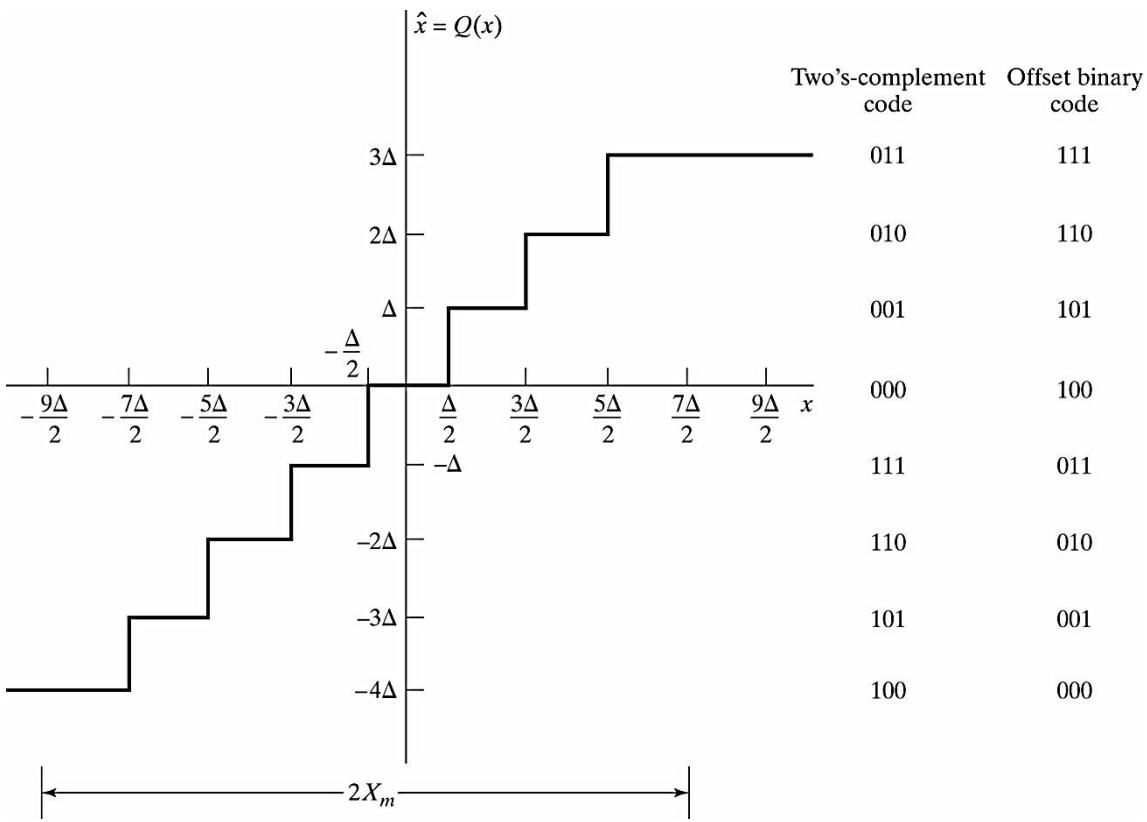

(II) A/D Conversion: Quantizer

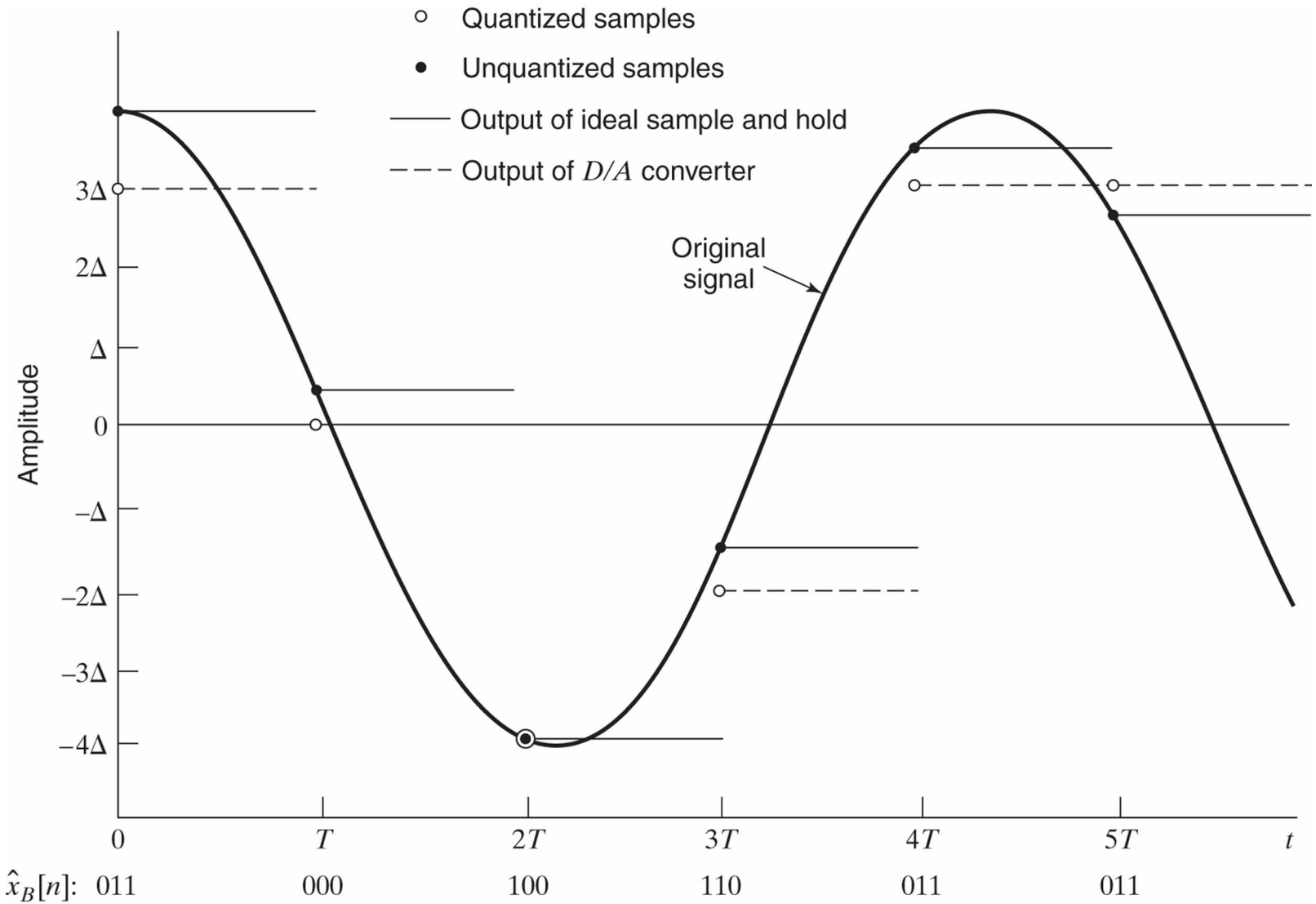

(II) A/D Conversion: Quantizer Noise Model

quantization error: $e[n] = \hat{x}[n] - x[n]$

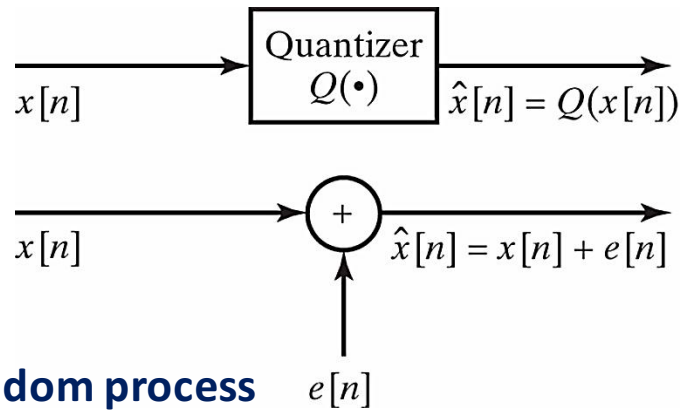

- ***e*[*n*] is a sample sequence of a stationary random process**
- ***e*[*n*] is uncorrelated with *x*[*n*]**
- **Error is a white noise process (i.e. random variables of the error process are uncorrelated)**
- **PDF of error process is uniform**

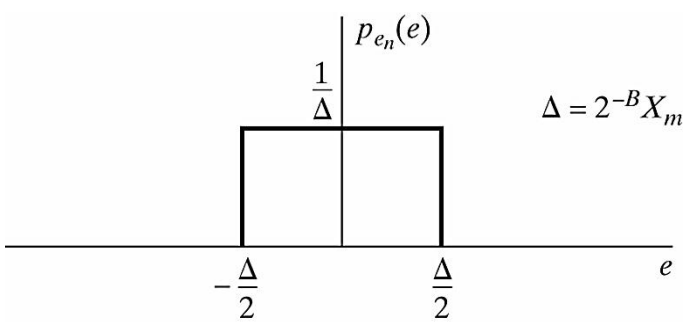

$-\Delta/2 \le e[n] < \Delta/2$

mean $\mu_e = 0$

variance $\sigma_e^2 = \dfrac{\Delta^2}{12}$

autocorrellation $\phi_{ee}[m] = \sigma_e^2 \delta[m]$

power spectrum densty $P_{ee}\left(e^{j\omega}\right) = \sigma_e^2, \quad |\omega| < \pi$

(II) A/D Conversion: Histograms of quantization noise

$x[n] = 0.99\cos(n/10)$

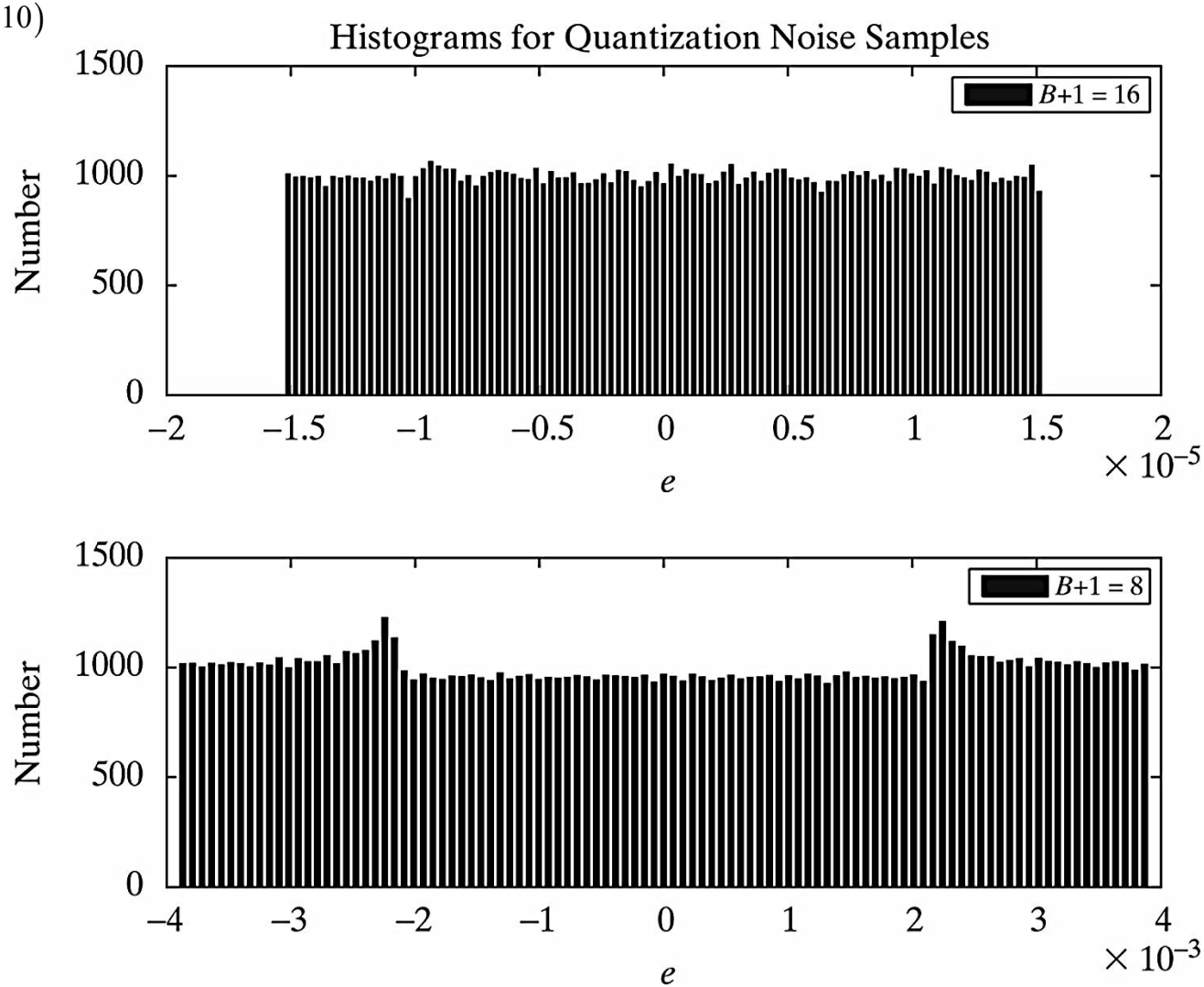

(II) A/D Conversion: Spectra of quantization noise

$$10\log_{10}\left[P_{ee}\left(e^{j\omega}\right)\right] = 10\log_{10}\left[\sigma_e^2\right]$$
$$= 10\log_{10}\left[\frac{1}{12\left(2^{2B}\right)}\right]$$
$$= -\left(10.79 + 6.02B\right)$$

This verifies the noise model of uniform quantizes

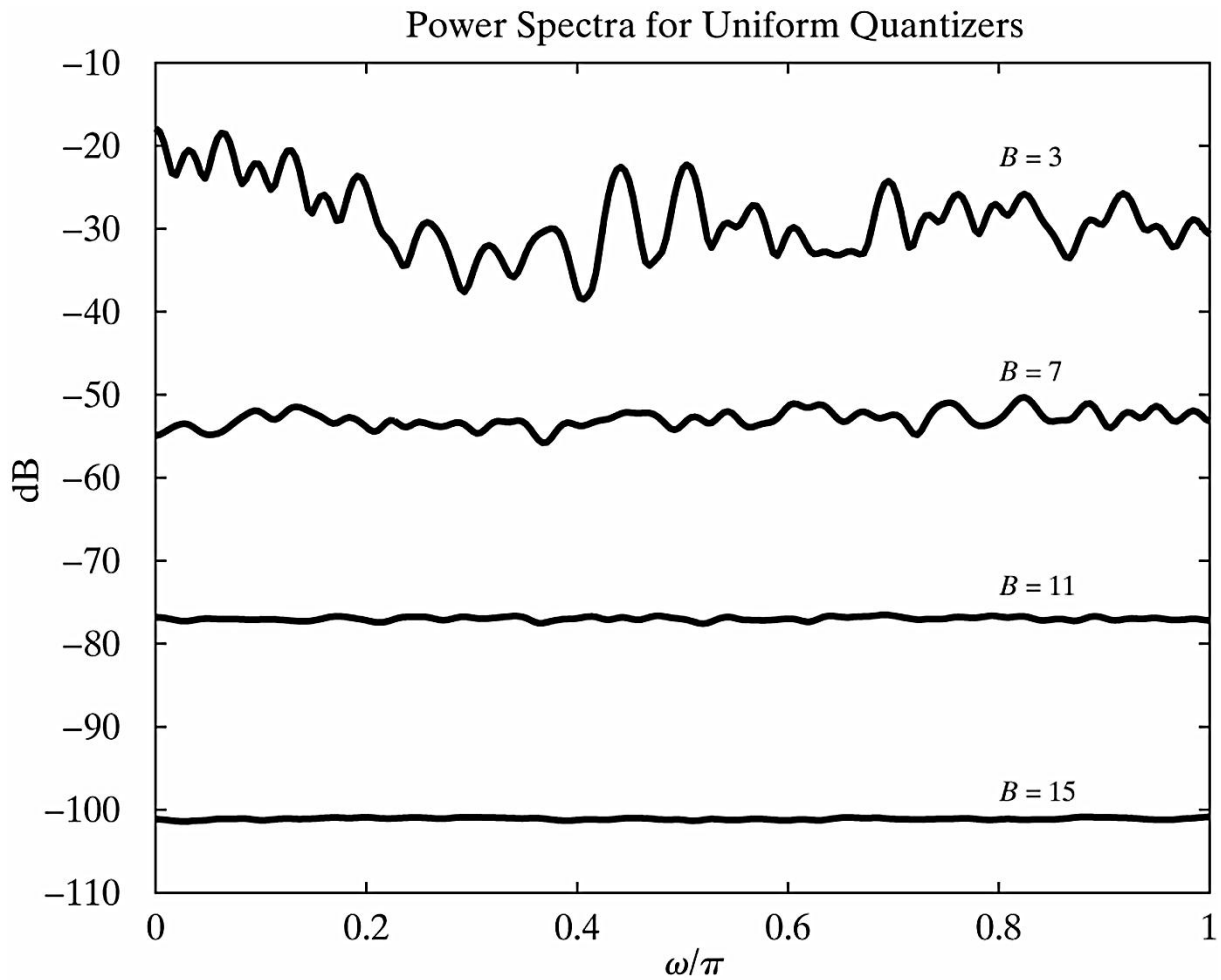

(II) A/D Conversion: Signal-to-Quantization Noise (SQNR)

- **Measure of amount of degradation of a signal by additive quantization noise**
  - Ratio of signal power (signal variance) to noise power (variance)

$$
\begin{aligned}
SQNR &= 10\log_{10}\left[\frac{\sigma_x^2}{\sigma_e^2}\right] \\
&= 10\log_{10}\left[\frac{12\cdot 2^{2B}\sigma_x^2}{X_m^2}\right] \\
&= 6.02B + 10.8 - 20\log_{10}\left(\frac{X_m}{\sigma_x}\right) \qquad (**)
\end{aligned}
$$

- **Observations:**
  - SNR increases by 6 dB for every bit added
  - X_m a parameter of quantizer; σ_x is rms value of input $x[n]$.
    - If σ_x is large, peak signal amplitude exceeds full scale amplitude X_m.
    - If σ_x is small, the last term in (**) will become large and negative, thus degrading the SQNR. If σ_x is halved, SQNR decreases by 6 dB
    - Hence it is very important that the signal amplitude be matched to the full-scale amplitude of the A/D converter

(II) A/D Conversion: SQNR Example

$x[n] = A\cos(n/10)$

$X_m = 1$

B varied

$$SQNR = 10\log_{10}\left[\frac{\frac{1}{N}\sum_{n=0}^{N-1}\left(x[n]\right)^2}{\frac{1}{N}\sum_{n=0}^{N-1}\left(e[n]\right)^2}\right], \quad N = 10100$$

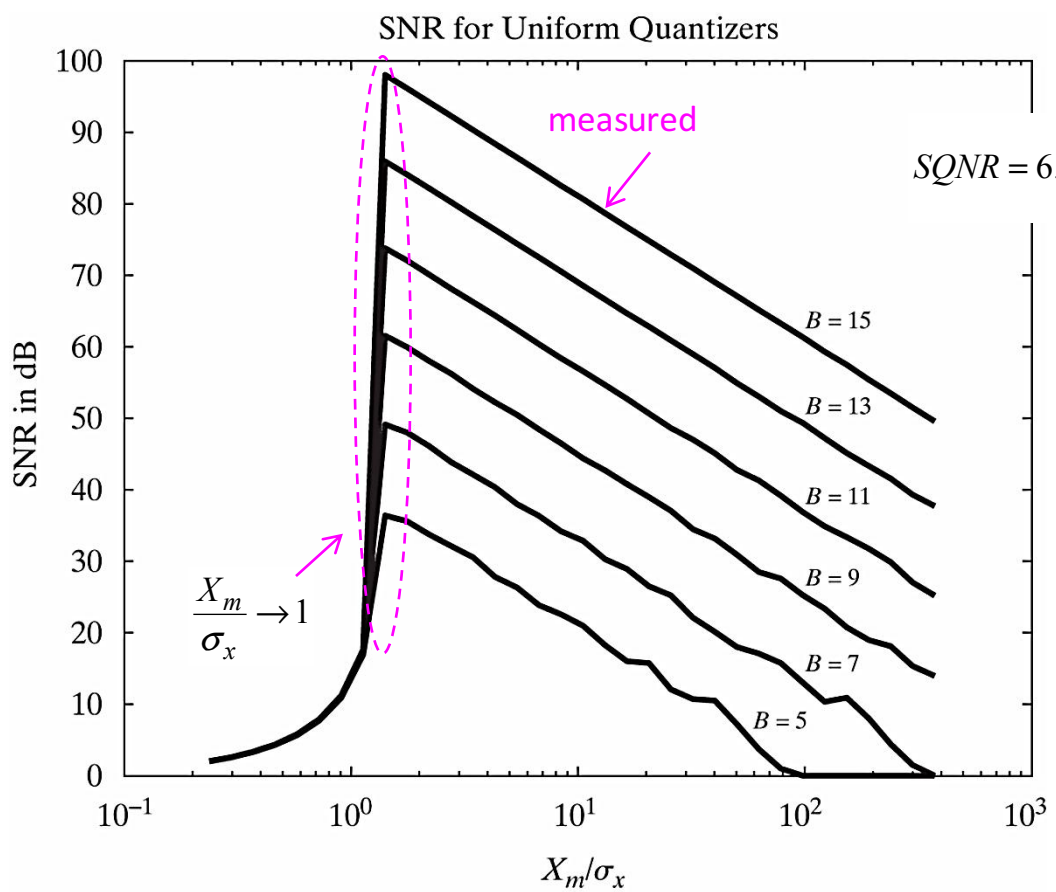

Predicted by model

$$SQNR = 6.02B + 10.8 - 20\log_{10}\left(\frac{X_m}{\sigma_x}\right)$$

(III) D/A Conversion

- **Ideal D/C = physically-realizable D/A + Analog LPF**

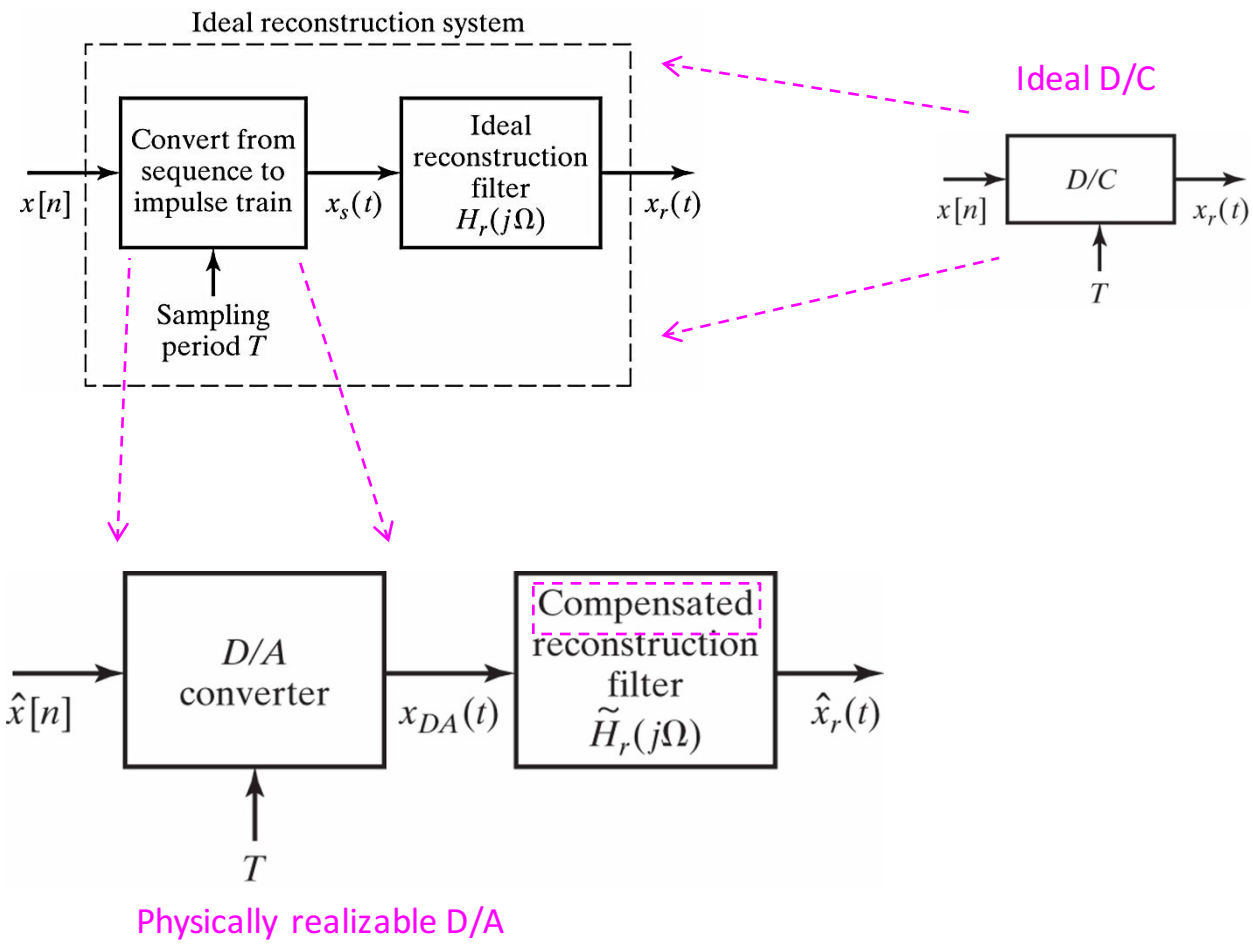

Physically realizable D/A

(III) D/A Conversion

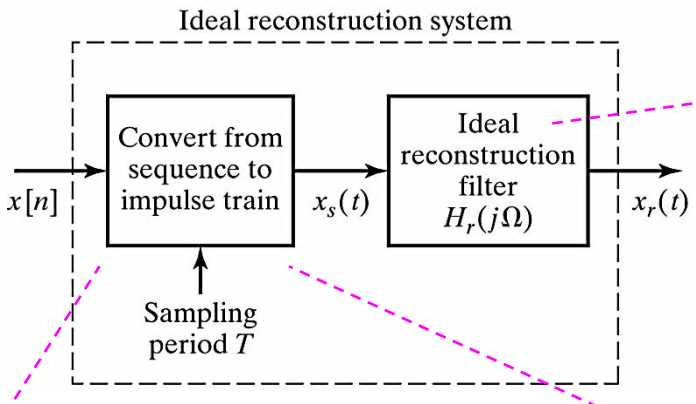

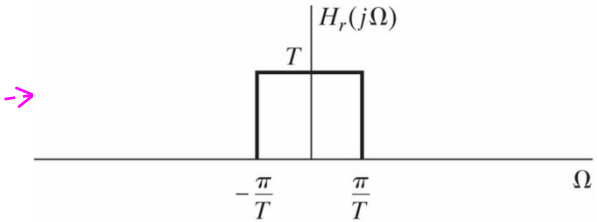

$$X_r(j\Omega) = H_r(j\Omega)X\left(e^{j\Omega T}\right)$$

$$x_r(t) = \sum_{n=-\infty}^{\infty} x[n]\frac{\sin\left[\pi(t-nT)/T\right]}{\pi(t-nT)/T}$$

Physically realizable D/A

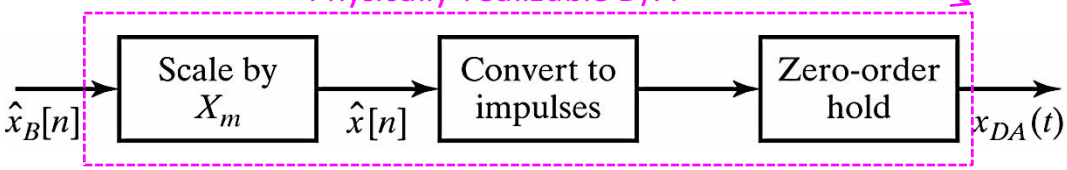

$$\boxed{\begin{aligned} x_{DA}(t) &= \sum_{n=-\infty}^{+\infty} X_m \hat{x}_B[n] h_0(t-nT) \\ &= \sum_{n=-\infty}^{+\infty} \hat{x}[n] h_0(t-nT) \end{aligned}}$$

$$\hat{x}[n] = x[n] + e[n]$$

$$h_0(t) = \begin{cases} 1 & 0 < t < T \\ 0 & \text{otherwise} \end{cases}$$

$$x_{DA}(t) = \underbrace{\sum_{n=-\infty}^{+\infty} x[n] h_0(t-nT)}_{x_0(t)} + \underbrace{\sum_{n=-\infty}^{+\infty} e[n] h_0(t-nT)}_{e_0(t)}$$

$$= x_0(t) + e_0(t)$$

(III) D/A Conversion: Compensated Reconstruction Filter

$$x_0(t) = \sum_{n=-\infty}^{+\infty} x[n] h_0(t - nT)$$

$$X_0(j\Omega) = \sum_{n=-\infty}^{\infty} x[n] H_0(j\Omega) e^{-j\Omega nT}$$

$$= \left(\sum_{n=-\infty}^{\infty} x[n] e^{-j\Omega nT} \right) H_0(j\Omega)$$

$$= X\left(e^{j\Omega T}\right) H_0(j\Omega)$$

$$\boxed{X\left(e^{j\omega}\right) = \frac{1}{T} \sum_{k=-\infty}^{\infty} X_a\left(j\left(\Omega - \frac{2\pi k}{T} \right) \right)}$$

X_a bandlimited to π/T.

ZOH filter

$$\boxed{H_0(j\Omega) = \frac{2\sin(\Omega T/2)}{\Omega} e^{-\Omega T/2}}$$

- **After passing $X_0(j\Omega)$ through a LPF with cutoff π/T, images in $X(j\Omega)$ will cancel, and only $X_a(j\omega/T)$ will pass.**
- **To cancel out the effect of $H_0(j\Omega)$, the "compensated reconstruction" filter is defined as follows:**

$$\boxed{\tilde{H}_r(j\Omega) = \frac{H_r(j\Omega)}{H_0(j\Omega)} = \begin{cases} \dfrac{\Omega T/2}{\sin(\Omega T/2)} e^{\Omega T/2} & |\Omega| < \pi/T \\ 0 & |\Omega| \geq \pi/T \end{cases}}$$

(III) D/A Conversion: Compensated Reconstruction Filter

(a) Frequency response of zero-order hold compared with ideal interpolating filter

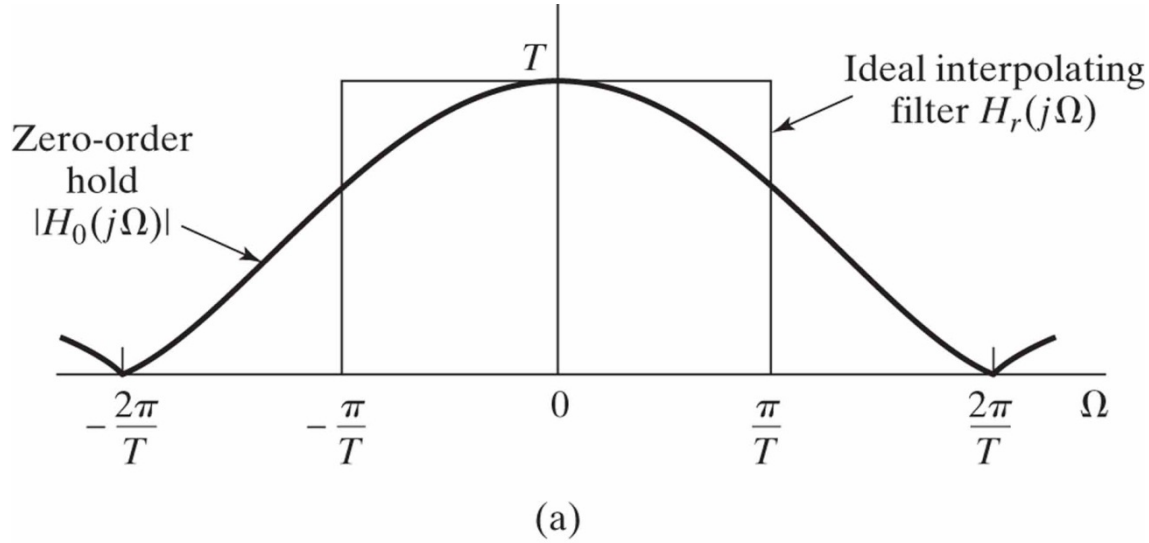

(b) Ideal compensated reconstruction filter for use with a zero-order-hold output.

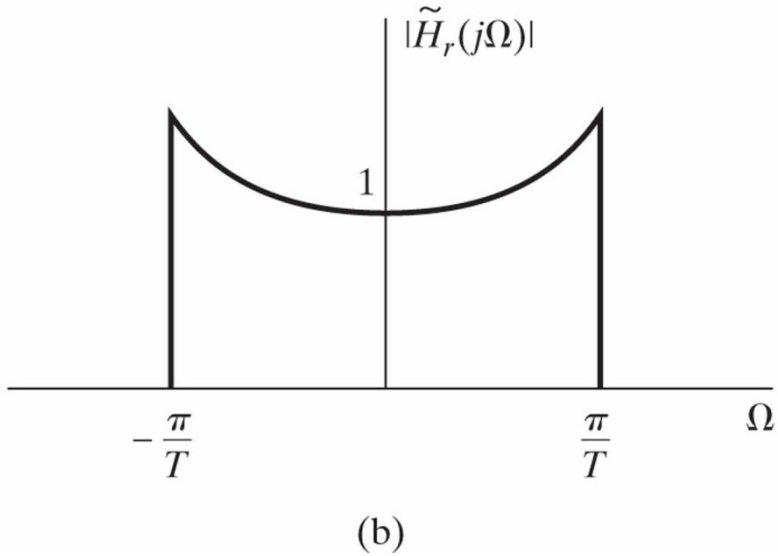

(III) D/A Conversion

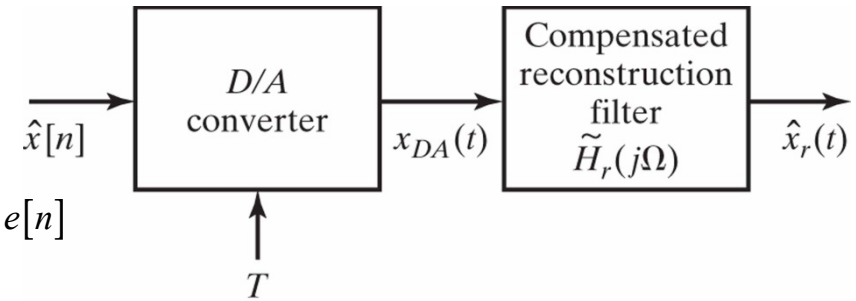

$$\hat{x}[n] = x[n] + e[n]$$

$$\hat{x}_r(t) = \sum_{n=-\infty}^{\infty} \hat{x}[n] \frac{\sin[\pi(t-nT)/T]}{\pi(t-nT)/T}$$

$$= \sum_{n=-\infty}^{\infty} x[n] \frac{\sin[\pi(t-nT)/T]}{\pi(t-nT)/T} + \sum_{n=-\infty}^{\infty} e[n] \frac{\sin[\pi(t-nT)/T]}{\pi(t-nT)/T}$$

$$\hat{x}_r(t) = x_a(t) + e_a(t)$$

bandlimited white noise

Summary of (I) + (II) + (III)

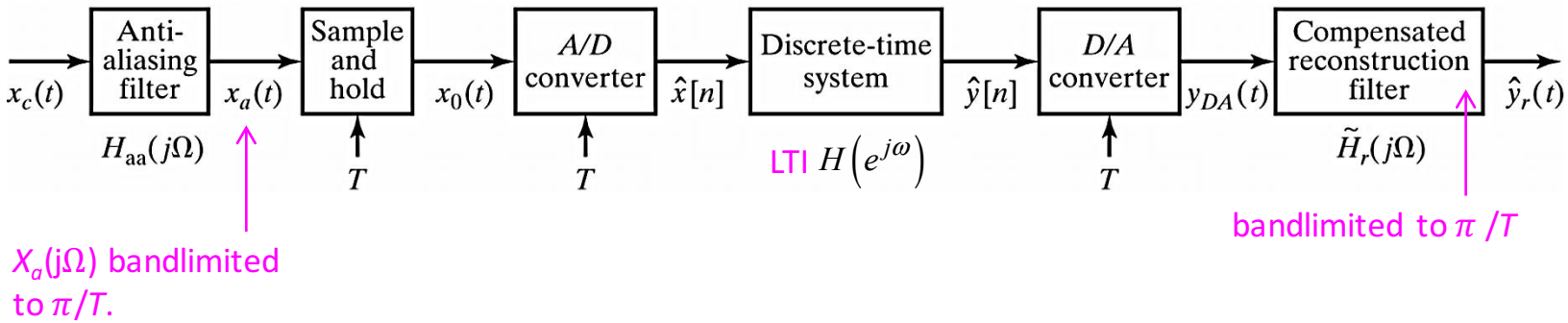

$X_a(j\Omega)$ bandlimited to π/T.

Overall output response: $\boxed{\hat{y}_r(t) = y_a(t) + e_a(t)}$

$$\boxed{T \cdot Y_a(j\Omega) = \tilde{H}_r(j\Omega) H_0(j\Omega) H\left(e^{j\Omega T}\right) H_{aa}(j\Omega) X_c(j\Omega)}$$

$$\boxed{T \cdot H_{\text{eff}}(j\Omega) = \tilde{H}_r(j\Omega) H_0(j\Omega) H\left(e^{j\Omega T}\right) H_{aa}(j\Omega)}$$

As for quantization noise $e_a(t)$ introduced by A/D:

- *Assume it is white noise with variance* $\sigma_e^2 = \Delta^2/12$
- *The successive filter stages will change the power spectrum of this noise as follows*

$$\boxed{P_{e_a}(j\Omega) = \left|\tilde{H}_r(j\Omega) H_0(j\Omega) H\left(e^{j\Omega T}\right)\right|^2 \sigma_e^2}$$

Oversampling and Noise Shaping

Oversampled A/D Conversion with Direct Quantization

- **Oversampling + DT filtering + downsampling make possible to implement sharp cutoff anti-aliasing filters**
  - Also permits a reduction in number of bits required in A/D conversion

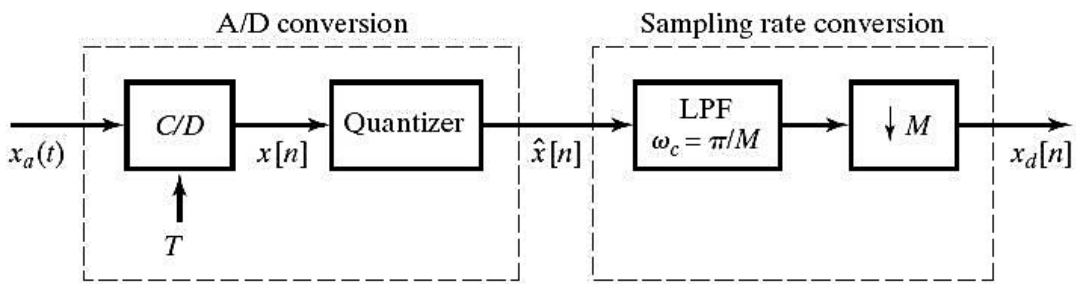

- **Assume $x_a(t)$:**
  - is a zero-mean, wide-sense-stationary process
  - Has power spectral density $\Phi_{x_a x_a}(j\Omega)$ and autocorrelation function $\phi_{x_a x_a}(\tau)$
  - bandlimited to Ω_N ➔ $\Phi_{x_a x_a}(j\Omega) = 0, \qquad |\Omega| \geq \Omega_N$
  - is oversampled at T so that $2\pi / T = 2M\Omega_N$
  - Here M is the oversampling ratio

Oversampled A/D Conversion with Direct Quantization

- **Using additive noise model, can replace previous figure with**

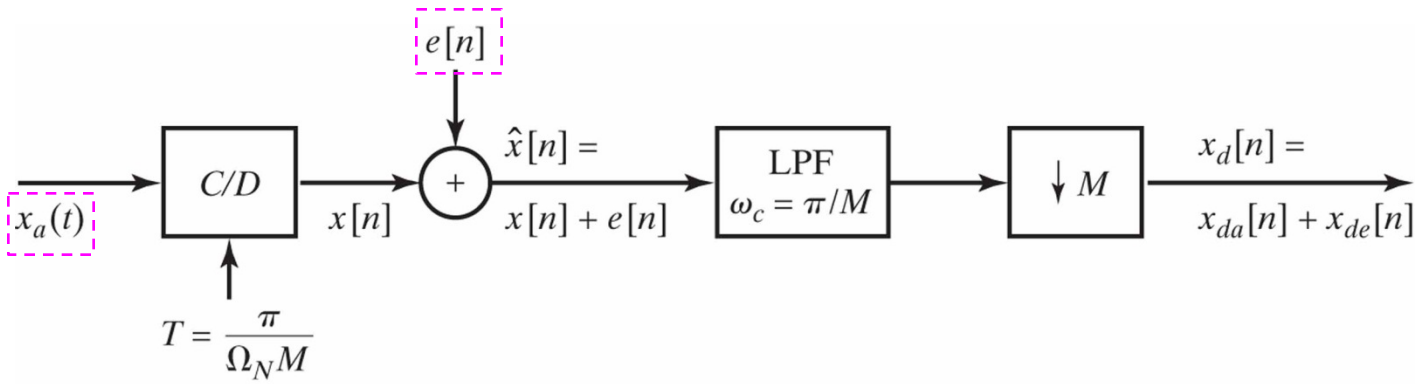

- **Goal: Determine ratio of signal power to quantization-noise power in the output signal $x_d[n]$ in terms of quantizer step Δ and oversampling ration M.**

$$\frac{\mathrm{E}\left\{x_{d_a}^2[n]\right\}}{\mathrm{E}\left\{x_{d_e}^2[n]\right\}}$$

- **Simplifications:**
  - System is linear + noise $e[n]$ uncorrelated with $x_a[n]$
  - Treat both processes separately in computing the respective powers in signal and noise components of output

Oversampled A/D Conversion with Direct Quantization: Step 1

- **Relate quantities between $x_a(t)$ and $x[n]$:**

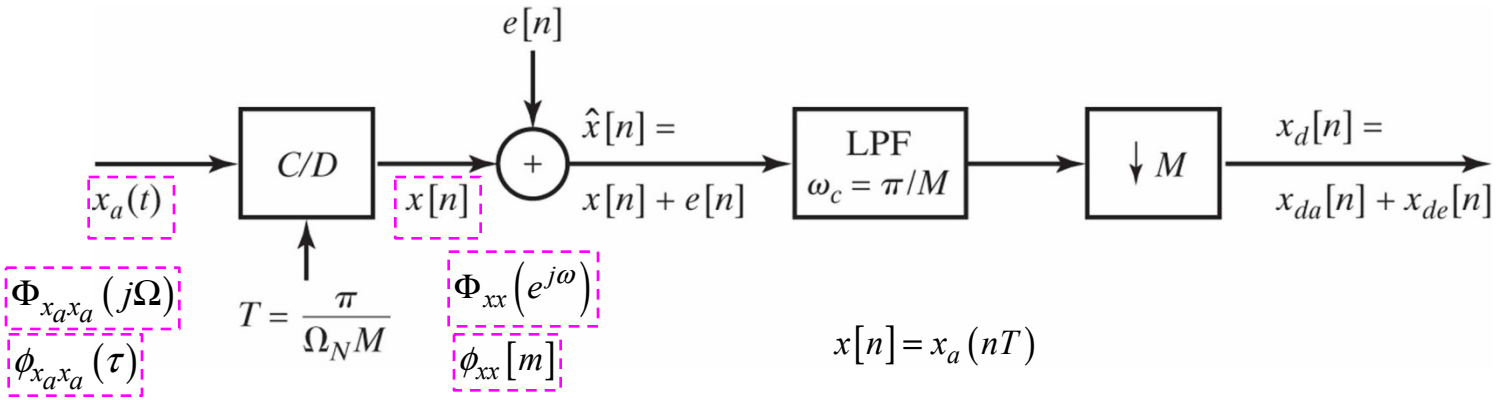

$$x[n] = x_a(nT)$$

$$\phi_{xx}[m] = \mathrm{E}\{x[n+m]x[n]\}$$
$$= \mathrm{E}\{x_a((n+m)T)x_a(nT)\}$$
$$= \phi_{x_a x_a}(mT)$$

$$\boxed{\Phi_{xx}\left(e^{j\Omega T}\right) = \frac{1}{T}\sum_{k=-\infty}^{\infty}\Phi_{x_a x_a}\left(j\left(\Omega - \frac{2\pi k}{T}\right)\right)}$$

$x_a(t)$ bandlimited and M is chosen such that $2\pi/T = 2M\Omega_N$

$$\Phi_{xx}\left(e^{j\omega}\right) = \begin{cases} \Phi_{x_a x_a}\left(j\dfrac{\omega}{T}\right) & |\omega| < \pi/M \\ 0 & \pi/M < \omega \le \pi \end{cases}$$

Power of original signal:

$$\mathrm{E}\{x_a^2(t)\} = \frac{1}{2\pi}\int_{-\Omega_N}^{\Omega_N}\Phi_{x_a x_a}(j\Omega)\,d\Omega$$

Power of sampled signal:

$$\mathrm{E}\{x^2[n]\} = \frac{1}{2\pi}\int_{-\pi}^{\pi}\Phi_{xx}\left(e^{j\omega}\right)d\omega$$
$$= \frac{1}{2\pi}\int_{-\pi/M}^{\pi/M}\frac{1}{T}\Phi_{x_a x_a}\left(j\frac{\omega}{T}\right)d\omega$$
$$= \frac{1}{2\pi}\int_{-\Omega_N}^{\Omega_N}\Phi_{x_a x_a}(j\Omega)\,d\Omega = \mathrm{E}\{x_a^2(t)\}$$

Total power of sampled signal equals power of original signal

Oversampled A/D Conversion with Direct Quantization: Step 1

- **Going from $x_a(t)$ and $x[n]$**

$$\Phi_{xx}\left(e^{j\omega}\right)=\begin{cases}\Phi_{x_a x_a}\left(j\dfrac{\omega}{T}\right) & |\omega|<\pi/M\\ 0 & \pi/M<\omega\le\pi\end{cases}$$

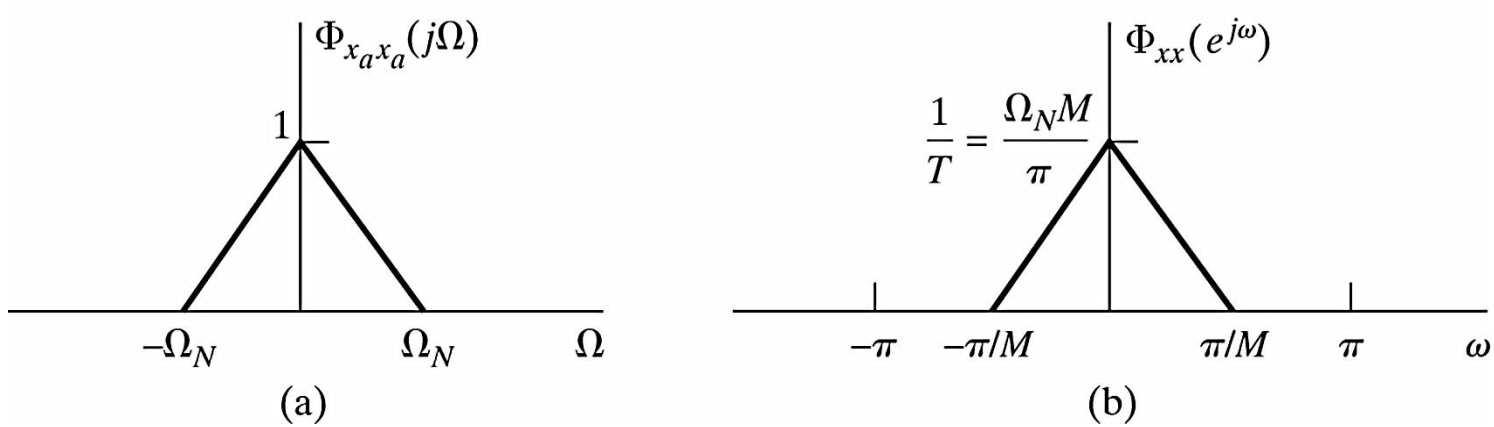

Oversampled A/D Conversion with Direct Quantization: Step 2

- **Relate quantities between $x[n]$ and $x_{da}[n]$**

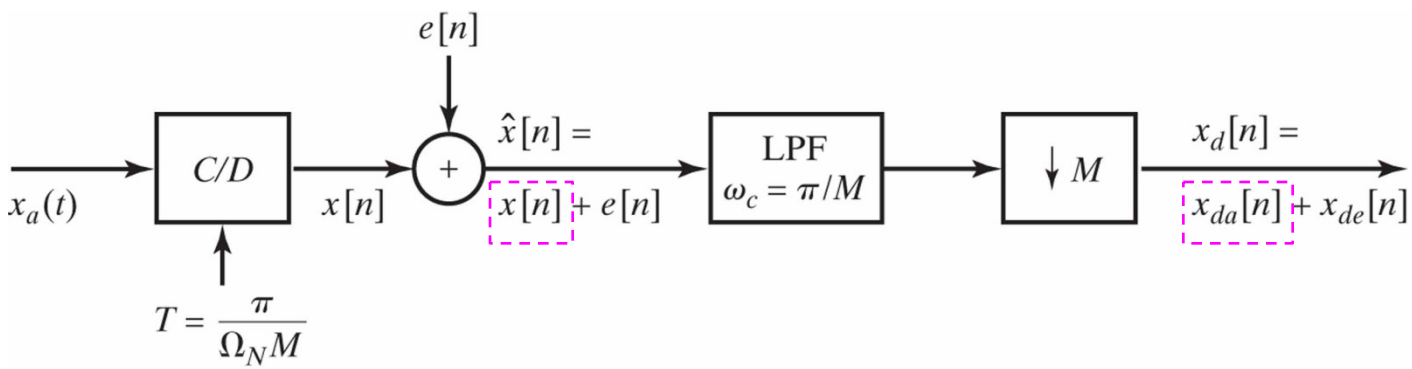

- **Decimation filter has cutoff $\omega_c = \pi/M$, the sampled signal should pass unaltered with same power. Proof as follows:**

$$\boxed{\begin{aligned}\Phi_{x_{d_a}x_{d_a}}\left(e^{j\omega}\right) &= \frac{1}{M}\sum_{k=0}^{M-1}\Phi_{xx}\left(e^{j(\omega-2\pi k)/M}\right)\\ &= \frac{1}{M}\Phi_{xx}\left(e^{j\omega/M}\right), \qquad |\omega|<\pi\end{aligned}}$$

Area under power spectrum remains constant as signal traverses from input to output

- **To get power in $x_{da}[n]$:** $\mathrm{E}\left\{x_{d_a}^2[n]\right\} = \frac{1}{2\pi}\int_{-\pi}^{\pi}\Phi_{x_{d_a}x_{d_a}}\left(e^{j\omega}\right)d\omega$

$$= \frac{1}{2\pi}\int_{-\pi}^{\pi}\frac{1}{M}\Phi_{xx}\left(e^{j\omega/M}\right)d\omega$$

$$= \frac{1}{2\pi}\int_{-\pi/M}^{\pi/M}\frac{1}{M}\Phi_{xx}\left(e^{j\omega}\right)d\omega = \mathrm{E}\left\{x^2[n]\right\}$$

Power independent of M

Oversampled A/D Conversion with Direct Quantization: Step 3

- **Relate quantities between error *e*[*n*] and $x_{de}[n]$**

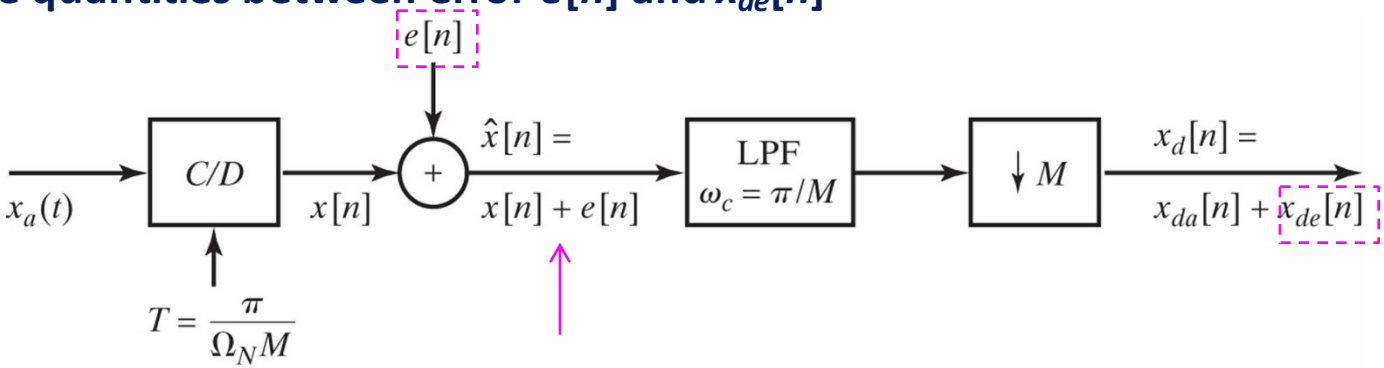

- ***e*[*n*]: WSS process with noise variance** $\sigma_e^2 = \Delta^2/12$
- **Autocorrelation and power spectral density are:**

$$\phi_{ee}[m] = \sigma_e^2 \delta[m]$$

$$\Phi_{ee}\left(e^{j\omega}\right) = \sigma_e^2, \quad |\omega| < \pi$$

➔ *Power in noise independent of M*

Power spectrum density of quantized $\hat{x}[n]$ *is the sum*

Power spectrum density of x[n]

Power spectrum density of e[n]

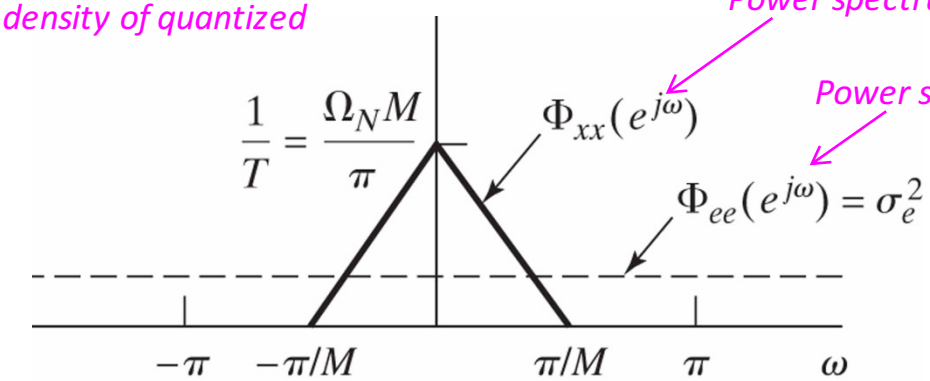

Oversampled A/D Conversion with Direct Quantization: Step 3

- **We have shown that power in *x*[*n*] and *e*[*n*] are independent of *M***
- **However, as oversampling ratio *M* increases, less of the quantization-noise spectrum overlaps with the signal spectrum.**
  - The LPF removes the quantization noise in the band $\frac{\pi}{M} < \omega \le \pi$.
  - It leaves the signal component unaltered

$$\mathrm{E}\left\{x_{d_e}^2[n]\right\} = \frac{1}{2\pi}\int_{-\pi}^{\pi}\frac{\sigma_e^2}{M}d\omega = \frac{\sigma_e^2}{M} = \frac{\Delta^2}{12M}$$

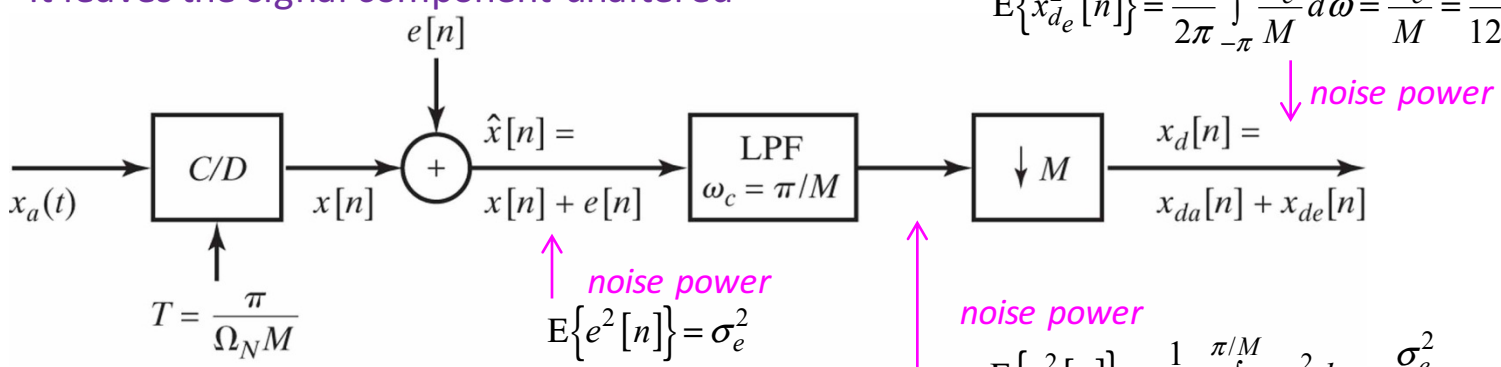

$$\mathrm{E}\left\{e^2[n]\right\} = \frac{1}{2\pi}\int_{-\pi/M}^{\pi/M}\sigma_e^2 d\omega = \frac{\sigma_e^2}{M}$$

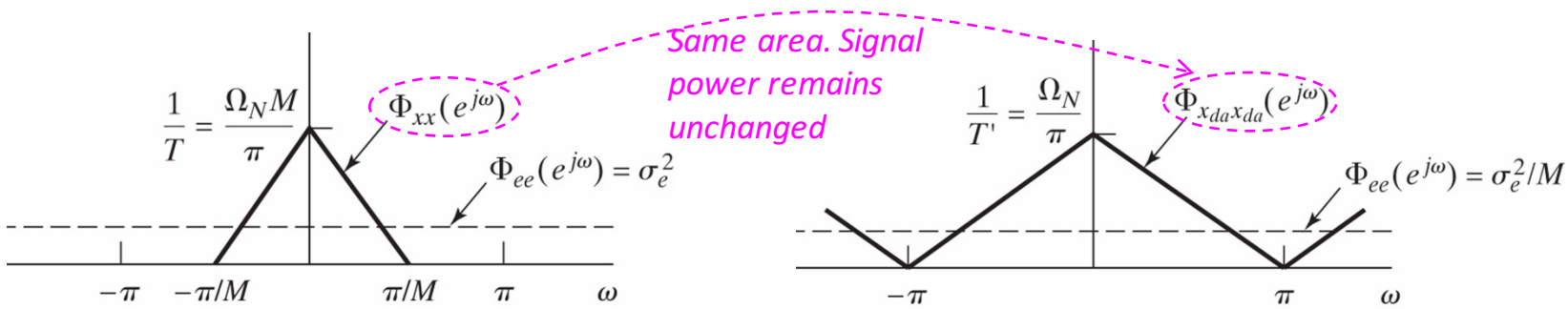

Oversampled A/D Conversion with Direct Quantization

- **For a given quantization noise power, there is a tradeoff between *M* and Δ:**

$$\Delta = \frac{X_m}{2^B}$$

$$\mathrm{E}\left\{x_{d_e}^2[n]\right\} = \frac{\Delta^2}{12M} = \frac{1}{12M}\left(\frac{X_m}{2^B}\right)^2$$

- **For a fixed quantizer, noise power can be reduced by increasing *M***
  - Since signal power is independent of *M*, increasing *M* will therefore increase SQNR

- **Alternatively, for a fixed noise power** $P_{d_e} = \mathrm{E}\left\{x_{d_e}^2[n]\right\}$
  - The required value of *B* is

$$B = -\frac{1}{2}\log_2 M - \frac{1}{2}\log_2 12 - \frac{1}{2}\log_2 P_{d_e} + \log_2 X_m$$

  - Every doubling of *M*, we need 1/2 bit less
  - Example: if we oversample by a factor of *M*=4, we need one less bit to achieve the desired accuracy in representing the signal

Oversampled A/D with Noise Shaping

Delta Modulation and Demodulation

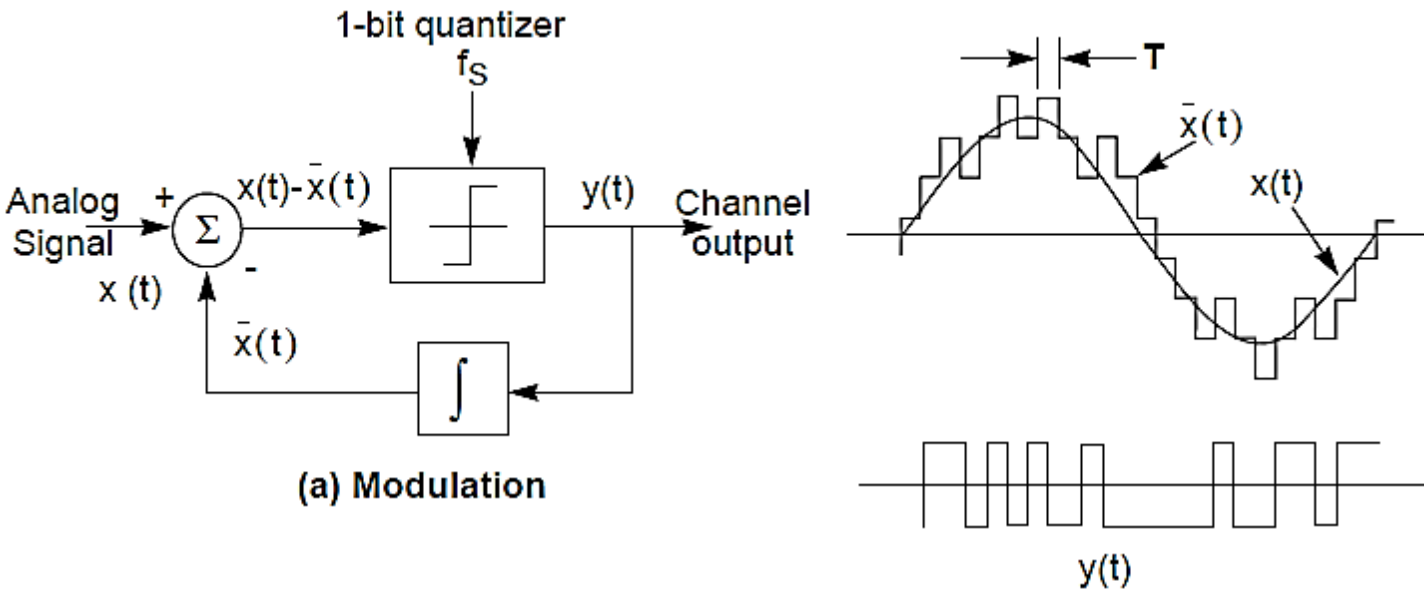

(a) Modulation

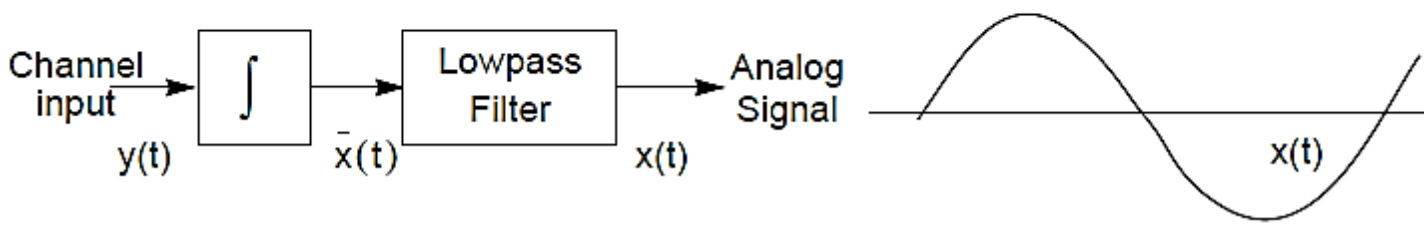

(b) Demodulation

Derivation of Sigma-Delta Modulation from Delta Modulation

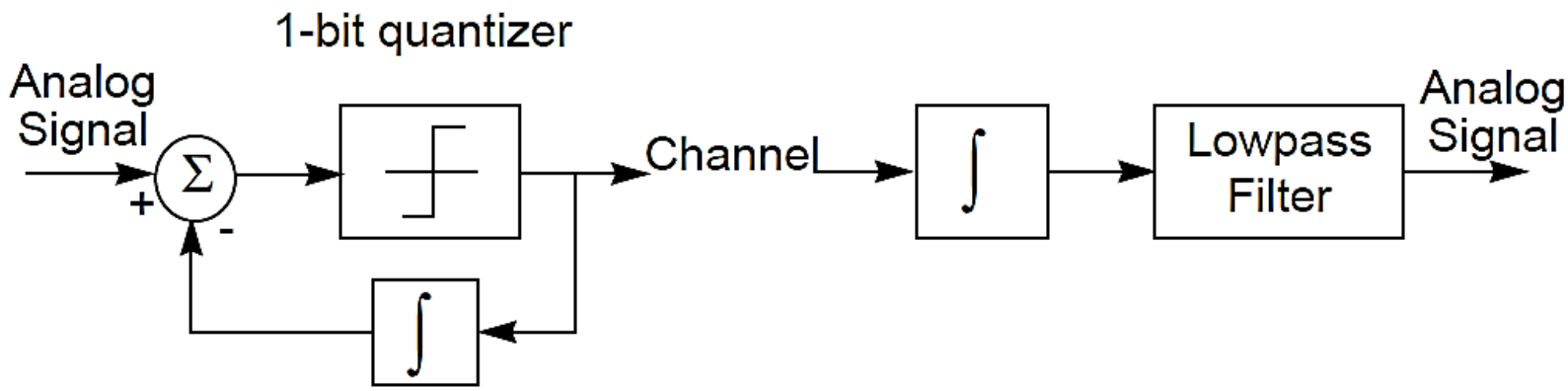

Modulation **(a)** **Demodulation**

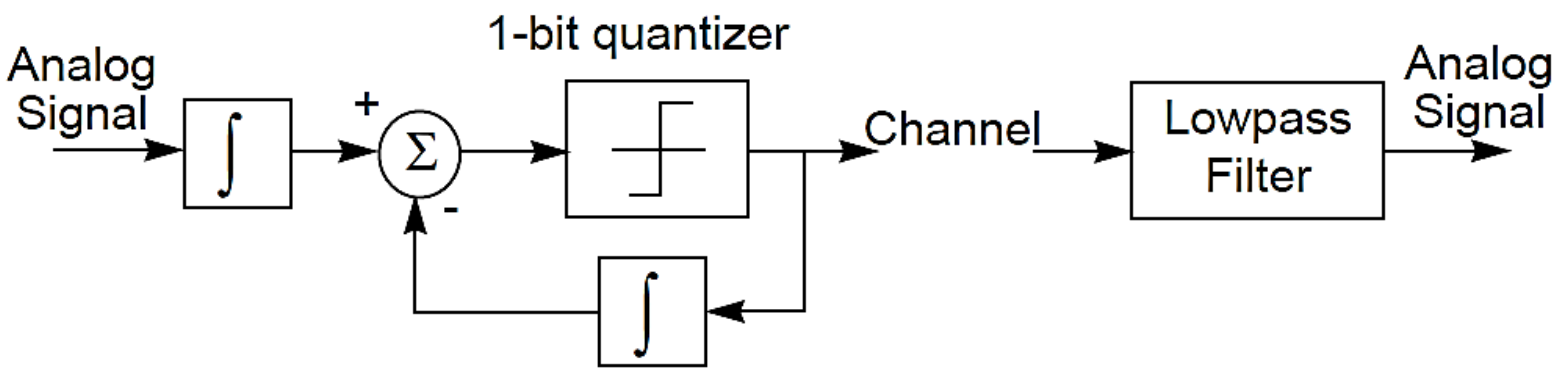

(b)

Note: Two Integrators (matched components)

Sigma-Delta Modulation

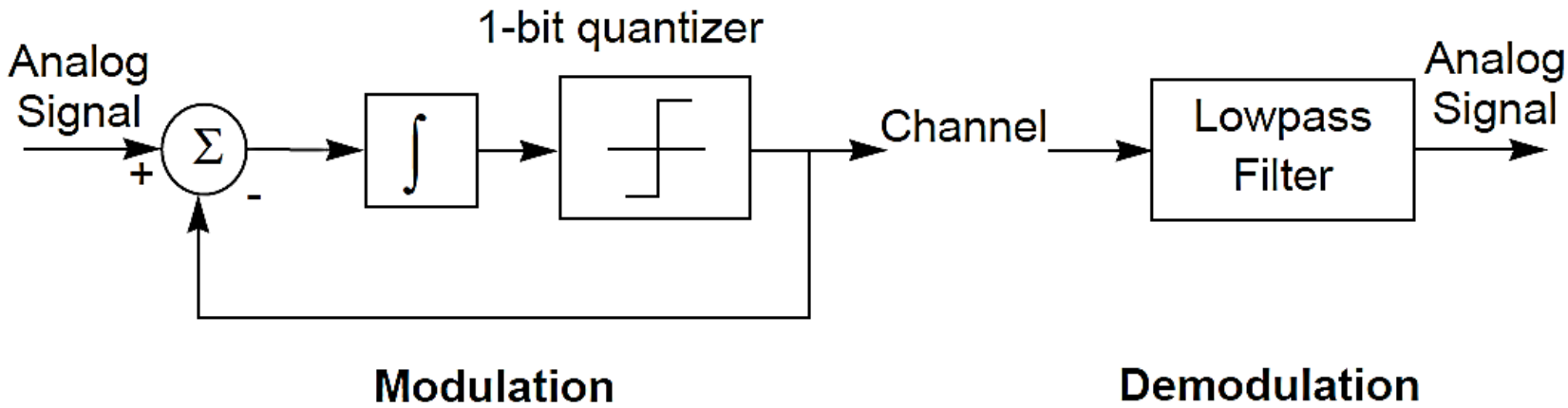

Note: Only one integrator

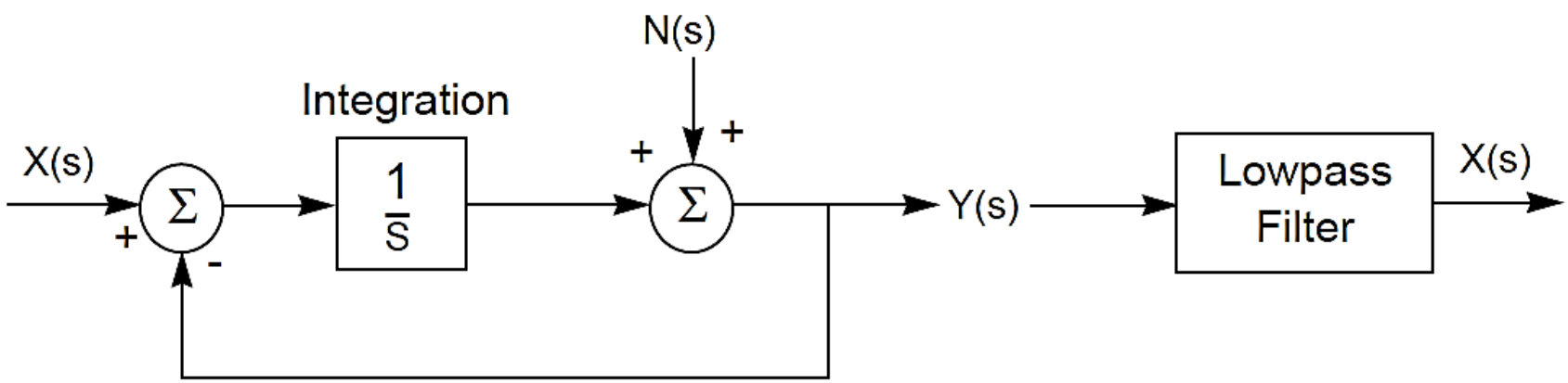

S-Domain Analysis of Sigma-Delta Modulator

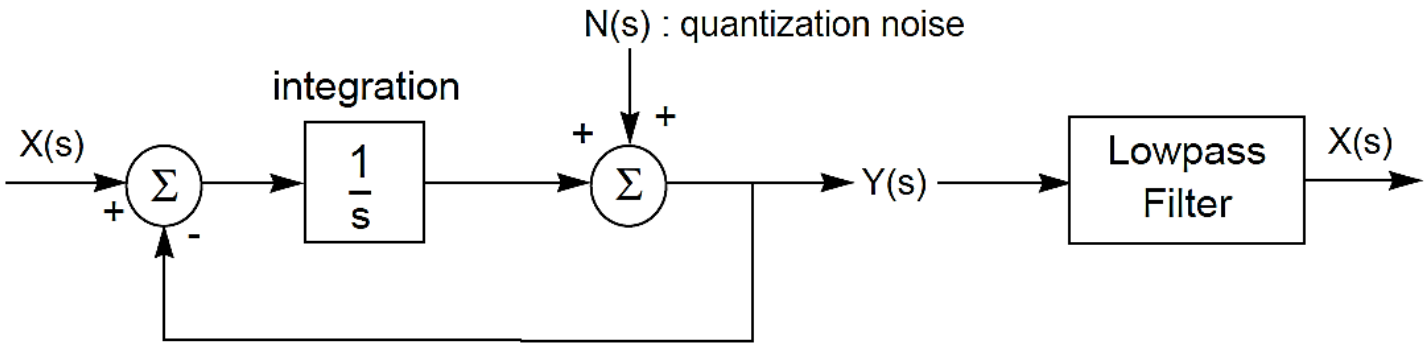

Signal Transfer Function:
(when N(s) = 0)

$$Y(s) = [X(s) - Y(s)]\ \frac{1}{s}$$

$$\frac{Y(s)}{X(s)} = \frac{\frac{1}{s}}{1+\frac{1}{s}} = \frac{1}{s+1}$$: lowpass filter

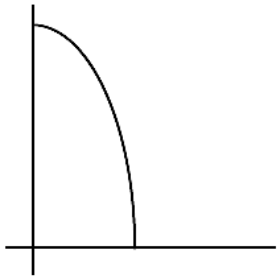

Noise Transfer Function:
(when X(s) = 0)

$$Y(s) = -Y(s)\frac{1}{s} + N(s)$$

$$\frac{Y(s)}{N(s)} = \frac{1}{1+\frac{1}{s}} = \frac{s}{s+1}$$: highpass filter

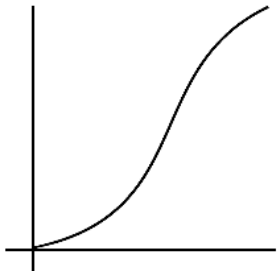

Oversampled Quantizer with Noise Shaping

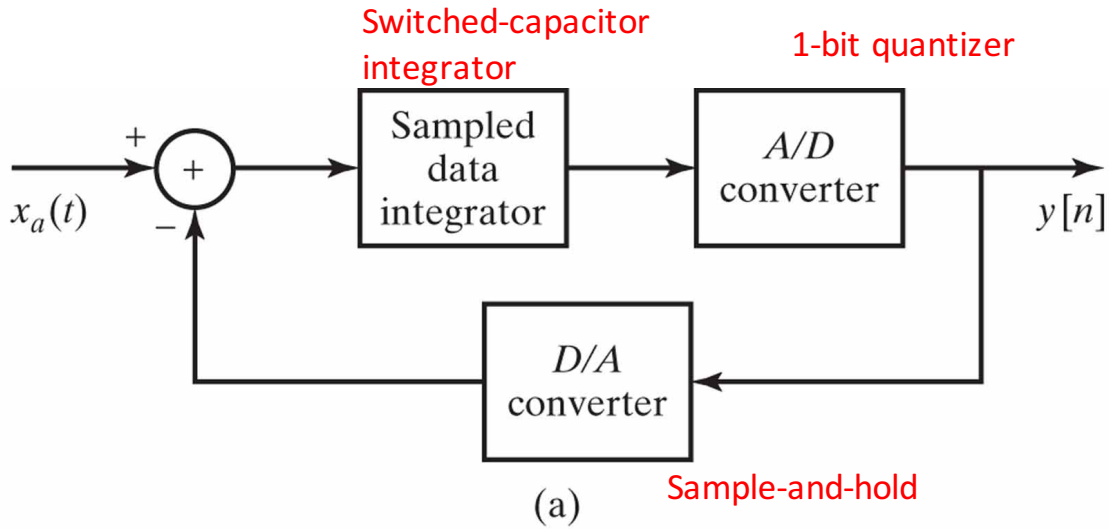

(a)

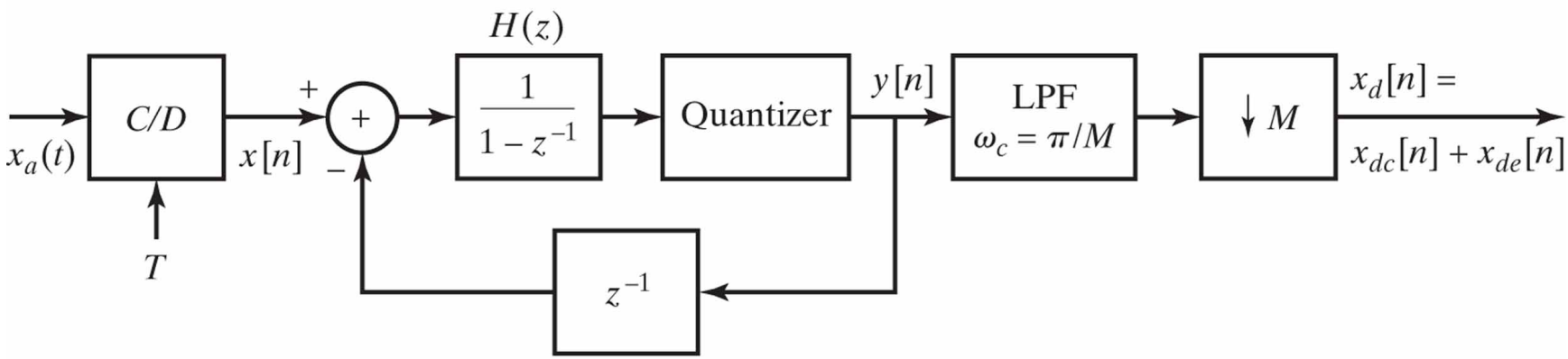

(b)

System With Quantizer Replaced by a Linear Noise Model

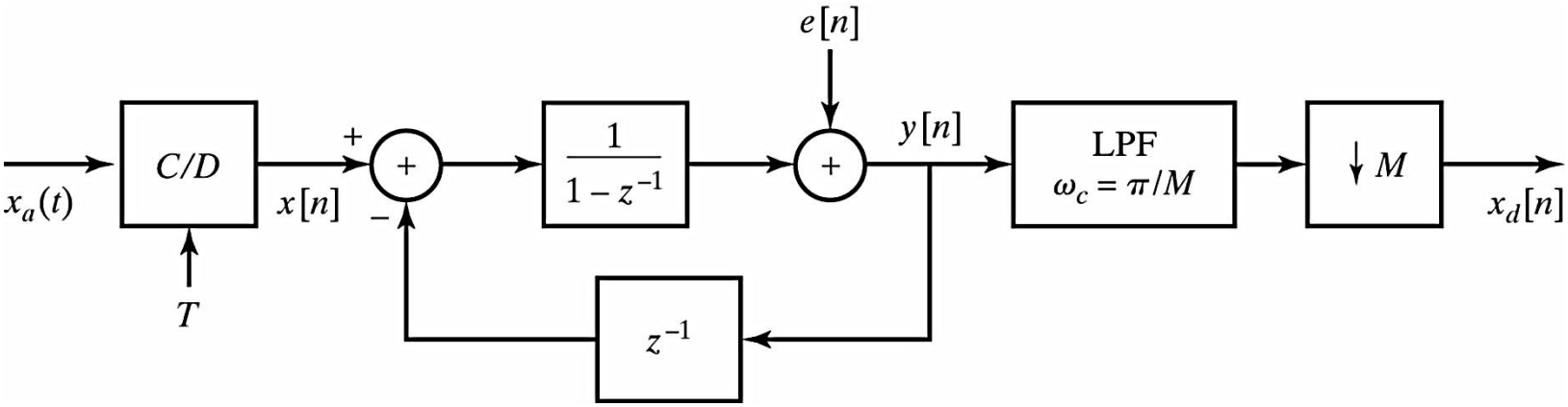

Equivalent Representation

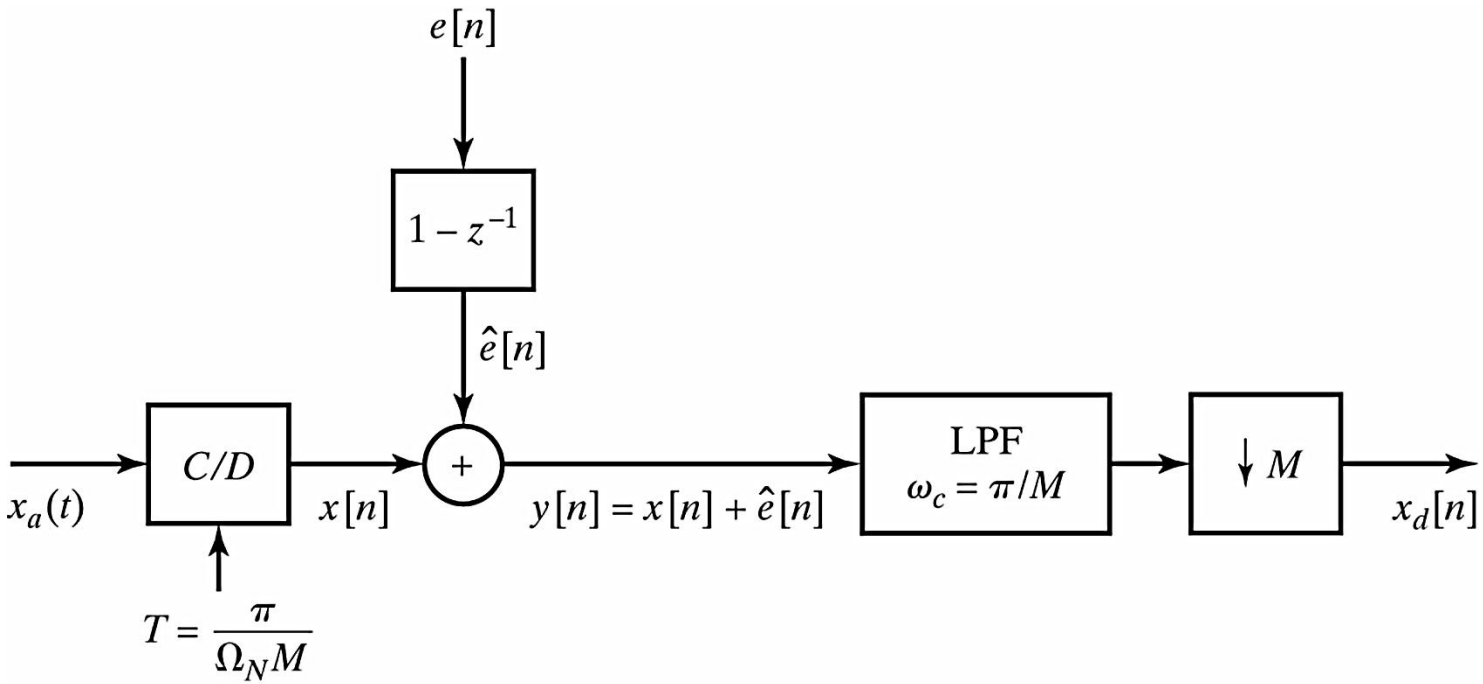

- **Transfer function from $x[n]$ to $y[n]$ is $H_x(z) = 1$**
- **Transfer function from $e[n]$ to $y[n]$ is $H_e(z) = 1 - z^{-1}$.**

$y_x[n] = x[n]$ (Power-spectrum does not change)

$\hat{e}[n] = e[n] - e[n-1]$ Power-spectrum:

$$\Phi_{\hat{e}\hat{e}}\left(e^{j\omega}\right) = \sigma_e^2 \left|H_e\left(e^{j\omega}\right)\right|^2, \quad |\omega| < \pi$$

$$= \sigma_e^2 \left[2\sin(\omega/2)\right]^2 \quad |\omega| < \pi$$

Power Spectral Density of Quantization Noise and the Signal

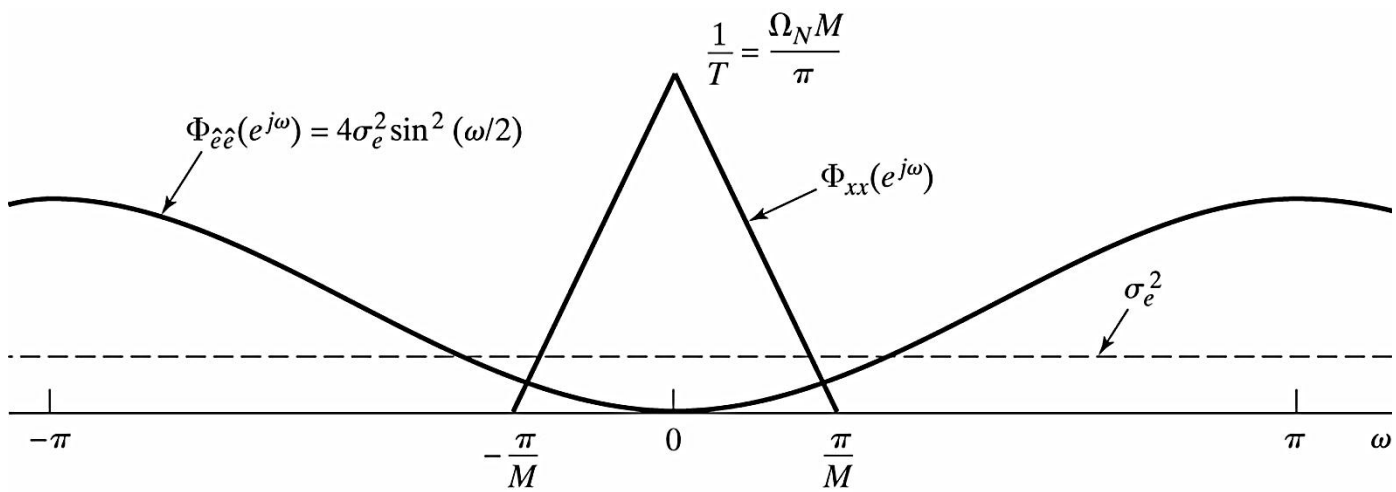

Total noise power increased from $\mathrm{E}\{e^2[n]\} = \sigma_e^2$ at the quantizer to $\mathrm{E}\{\hat{e}^2[n]\} = 2\sigma_e^2$ at the output of the noise-shaping system.

However, noise has been shaped in a way that more of the noise power is outside the signal band $|\omega| < \pi/M$.

Power Spectral Densities After Downsampling

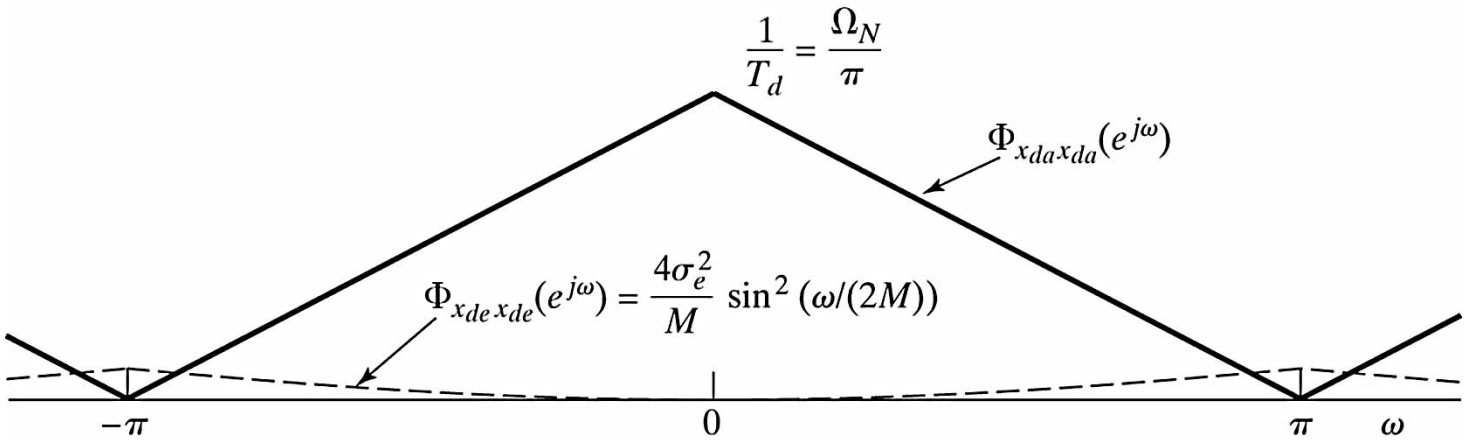

$$x_d[n] = x_{d_a}[n] + x_{d_e}[n]$$

$$P_{d_a} = \mathrm{E}\left\{x_{d_a}^2[n]\right\} = \mathrm{E}\left\{x^2[n]\right\} = \mathrm{E}\left\{x_a^2(t)\right\}$$

$$P_{d_e} = \frac{1}{2\pi}\int_{-\pi}^{\pi}\Phi_{x_{d_e}x_{d_e}}\left(e^{j\omega}\right)d\omega = \frac{1}{2\pi}\frac{\Delta^2}{12}\int_{-\pi}^{\pi}\left(2\sin\left(\frac{\omega}{2M}\right)\right)^2 d\omega$$

$$\sin\left(\frac{\omega}{2M}\right) \approx \frac{\omega}{2M}$$

$$P_{d_e} = \frac{1}{36}\frac{\Delta^2\pi^2}{M^3}$$

For a given quantization noise power, again there is a tradeoff between *M* and Δ:

$$B = -\frac{3}{2}\log_2 M - \log_2(\pi/6) - \frac{1}{2}\log_2 P_{d_e} + \log_2 X_m$$

Every doubling of *M*, we gain 3/2 bits of quantization

Equivalent Savings in Quantizer Bits

TABLE 4.1 EQUIVALENT SAVINGS IN QUANTIZER BITS RELATIVE TO $M = 1$ FOR DIRECT QUANTIZATION AND 1st-ORDER NOISE SHAPING

M	Direct quantization	Noise shaping
4	1	2.2
8	1.5	3.7
16	2	5.1
32	2.5	6.6
64	3	8.1

Oversampled Quantizer with 2nd-Order Noise Shaping

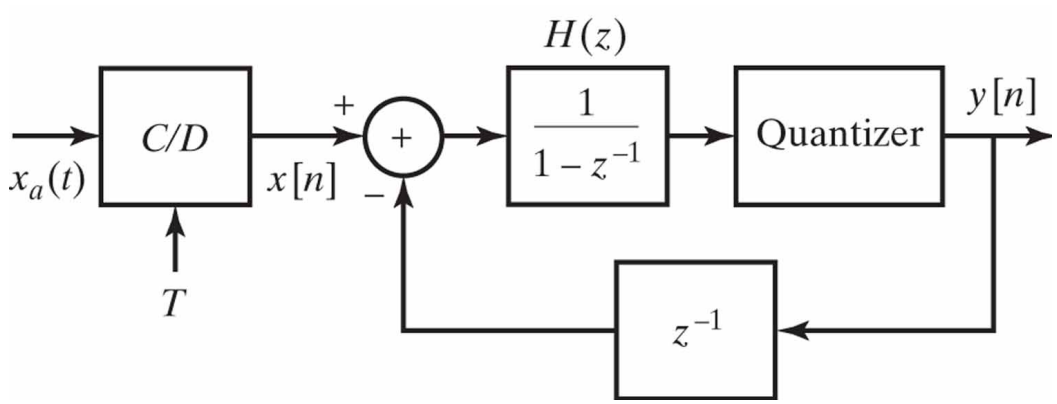

$$H_e(z) = \left(1 - z^{-1}\right)^2$$

$$\Phi_{\hat{e}\hat{e}}\left(e^{j\omega}\right) = \sigma_e^2\left[2\sin(\omega/2)\right]^4$$

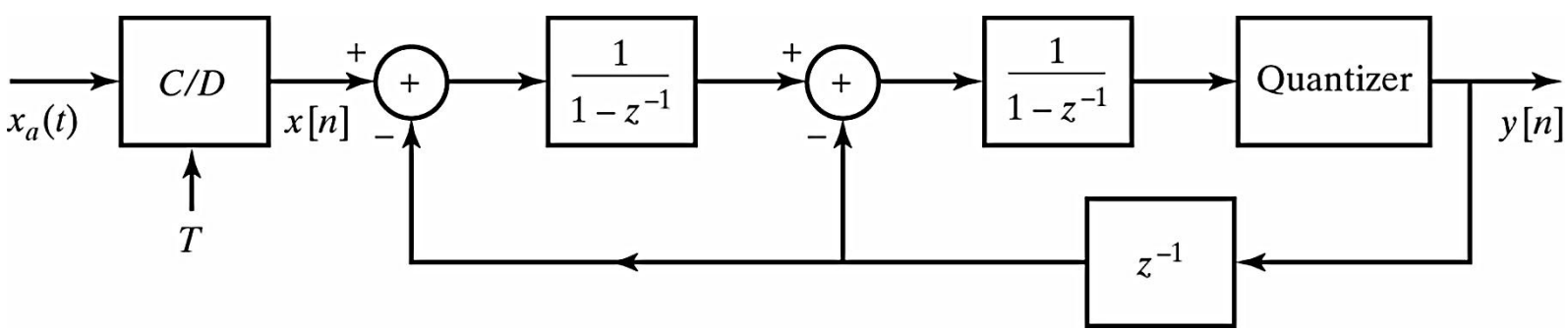

Reduction on Quantizer Bits as Noise Shaping Order *p* Increases

TABLE 4.2 REDUCTION IN QUANTIZER BITS AS ORDER p OF NOISE SHAPING

Quantizer order p	Oversampling factor M				
	4	8	16	32	64
0	1.0	1.5	2.0	2.5	3.0
1	2.2	3.7	5.1	6.6	8.1
2	2.9	5.4	7.9	10.4	12.9
3	3.5	7.0	10.5	14.0	17.5
4	4.1	8.5	13.0	17.5	22.0
5	4.6	10.0	15.5	21.0	26.5

Oversampling and Noise Shaping in D/A Conversion

Oversampling and Noise Shaping in D/A Conversion

- **Apply same principles in reverse order to achieve improvements in D/A**

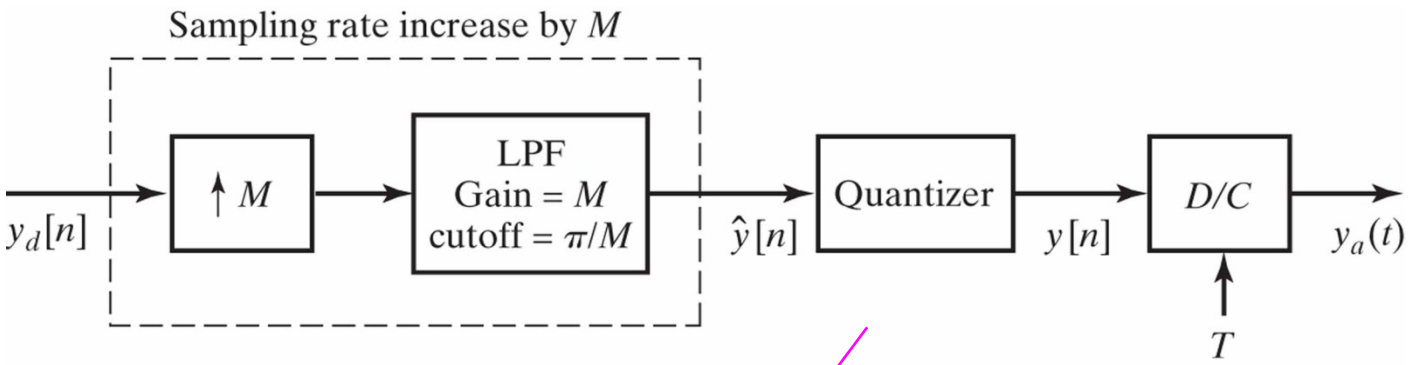

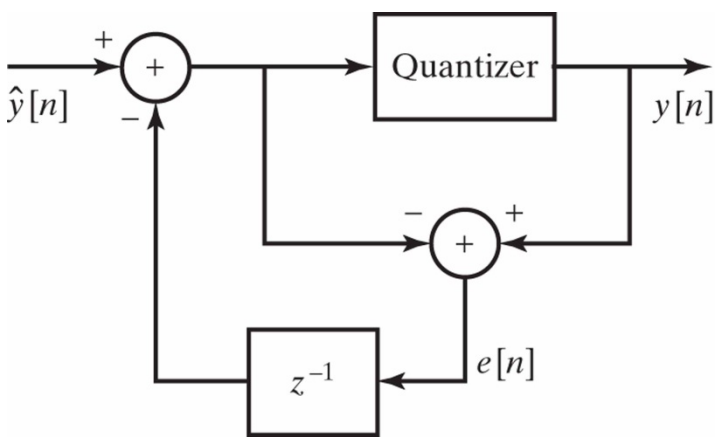

Oversampled D/A Conversion with Linear Noise Model

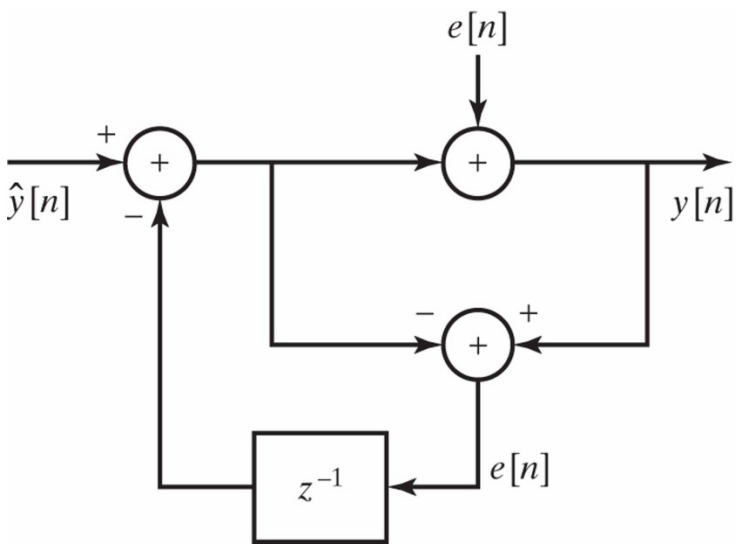

Oversampled D/A Conversion