EECE 491: Discrete-time Signal Processing

Mohammad M. Mansour
Dept. of Electrical and Compute Engineering
American University of Beirut

Lecture 11: Multirate Signal Processing

Announcements

- **Reading**
  - O&S
    - Chapter 4

Outline

- **Filtering and compression/expansion**
- **Polyphase decompositions**
- **Multirate filter banks**

Sample-Rate Conversion

- **We can change the sample rate of D.T. signal by a combination of interpolation and decimation**
  - To obtain a new sampling rate of $1.01T$, we can first interpolate by $L = 100$, then decimate by $M = 101$.
  - These large intermediate changes in sampling rate would require large amounts of computations.

- **Can take advantages of techniques broadly known as *multirate signal processing***
  - They utilize upsampling, downsampling, compressors, and expanders to increase efficiency of SP systems
  - Applications besides sample rate conversion:
    - A/D and D/A systems that exploit <u>oversampling and noise shaping</u>
    - Filter banks for the analysis and processing of signals

- **We will explore two basic results of multirate signal processing**
  1. Interchanging of filtering and downsampling/upsampling operations
  2. Polyphase decomposition

Compressor/Expander

- **For a compressor-by-*M* with input *x*[*n*] and output $x_d[n]$, we have**

$$X_d\left(e^{j\omega}\right)=\frac{1}{M}\sum_{i=0}^{M-1}X\left(e^{j(\omega-2\pi i)/M}\right)$$

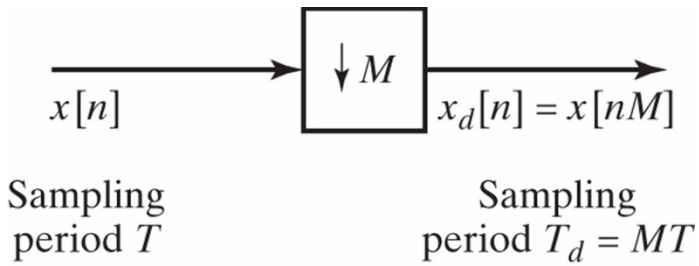

- **For an expander-by-*L* with input *x*[*n*] and output $x_e[n]$, we have**

$$X_e\left(e^{j\omega}\right)=X\left(e^{j\omega L}\right)$$

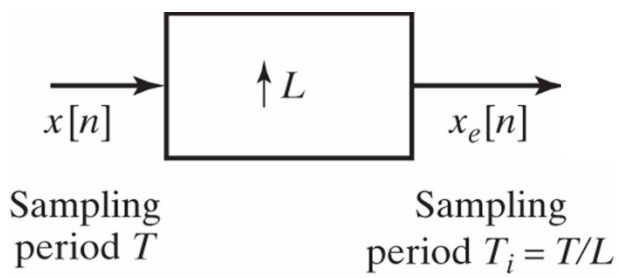

Example

- Consider two systems A and B

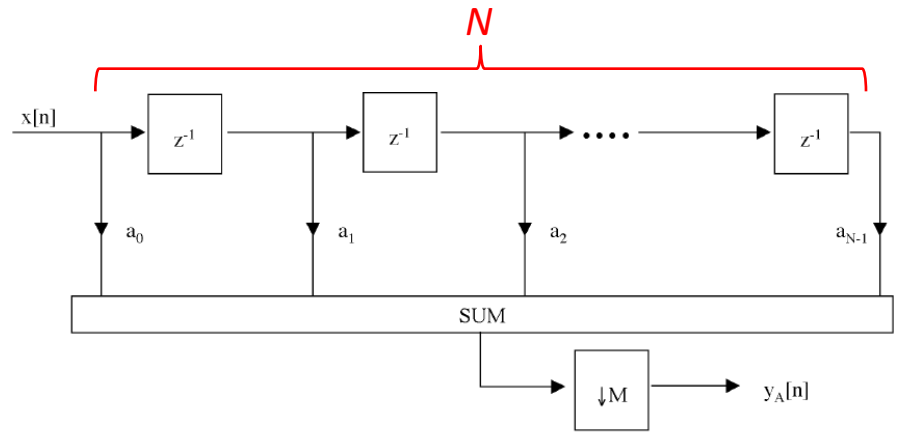

System A

- Do the two systems have the same input-output relationship?

  YES

- If $x[n]$ is clocked at 1 sample/second, how many multiplications per second are required in System A?

  N multiplications per second

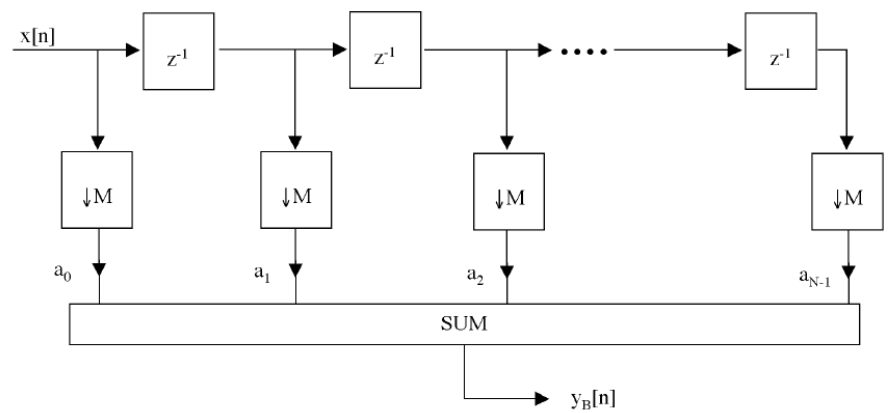

System B

- How many in system B?

  N/M multiplications per second

Noble Identity I: Interchange of Filtering with Compressor

- **Prove the following two systems are equivalent**

System A

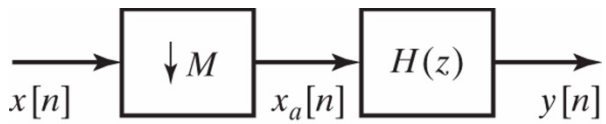

(a)

System B

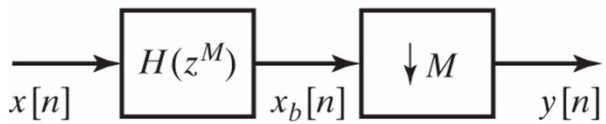

(b)

- **For System B, we have** $X_b\left(e^{j\omega}\right) = H\left(e^{j\omega M}\right)X\left(e^{j\omega}\right)$

$$
\begin{aligned}
Y\left(e^{j\omega}\right) &= \frac{1}{M}\sum_{i=0}^{M-1} X_b\left(e^{j(\omega-2\pi i)/M}\right) \\
&= \frac{1}{M}\sum_{i=0}^{M-1} H\left(e^{j(\omega-2\pi i)}\right)X\left(e^{j(\omega-2\pi i)/M}\right) \\
&= H\left(e^{j\omega}\right)\frac{1}{M}\sum_{i=0}^{M-1} X\left(e^{j(\omega-2\pi i)/M}\right) \\
&= H\left(e^{j\omega}\right)X_a\left(e^{j\omega}\right)
\end{aligned}
$$

Noble Identity I: Interchange of Filtering with Compressor

- **What is the relationship between $H(z)$ and $H(z^M)$?**
  - **Example**: Let $H(z) = 1 + 2z^{-1} + 3z^{-2}$.
  - For $M = 3$, we have $H(z^3) = 1 + 2z^{-3} + 3z^{-6}$
  - Hence the filter response $H(z^M)$ is an expanded version of $H(z)$ by a factor of M.
  - For $H(z^M)$, we have $h[n] = 0, \forall n \neq km$, any integer k.

- **Therefore, identity I says that:**
  - Moving an LTI filter which is at the output of a compressor-by-M to the compressor's input expands the filter's response by M.
  - The converse is not always true
  - Moving an LTI filter H which is at the input of a compressor-by-M to its output compresses the filter's response by M only if the LTI filter can be represented as $H(z^M)$ using integer powers of z^M.

Example: Intuitive Explanation of Identity I

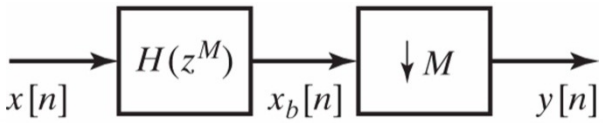

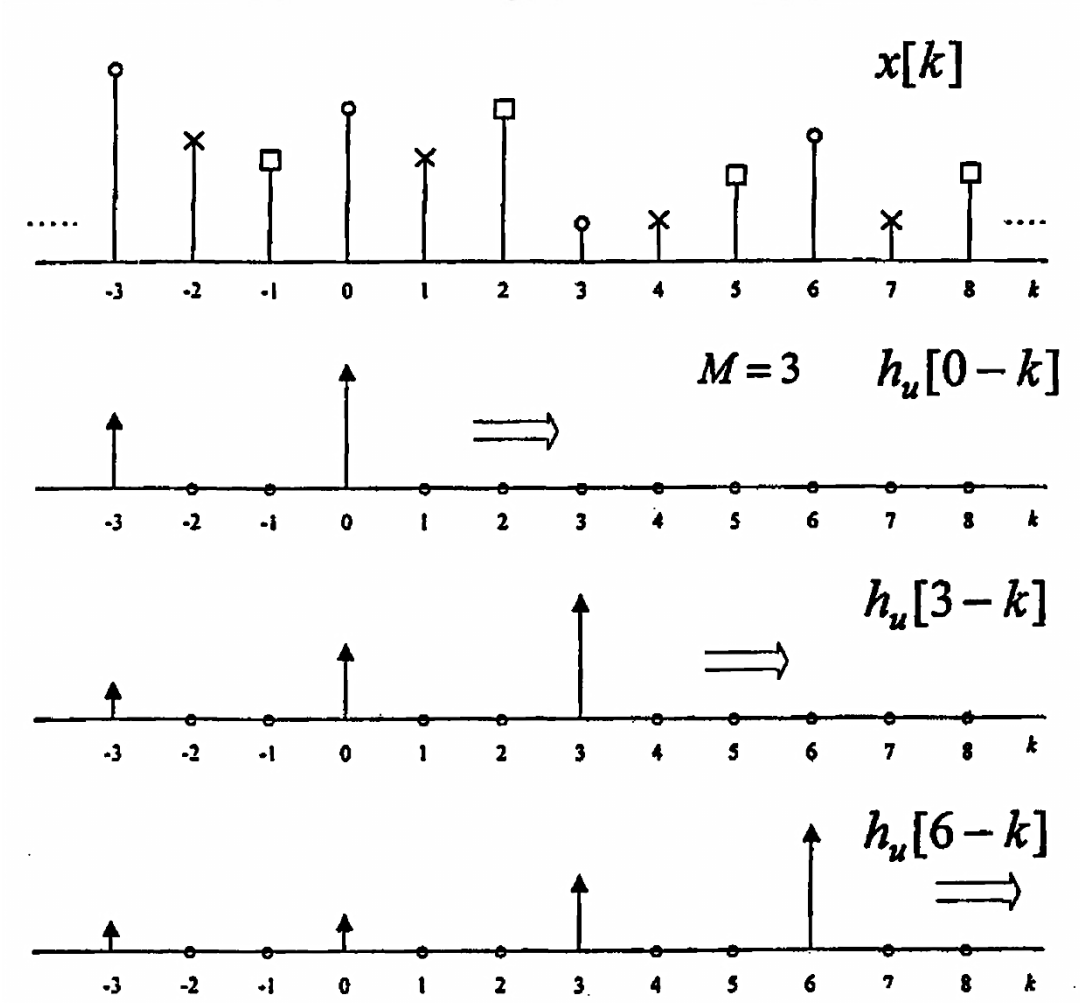

When a signal x[n] is processed by filtering with some $H(z^M)$ (which implies $h[n] = 0, \forall n \neq km$, any integer k) and compressing by a factor of M, each output sample y[n] depends only on every M^{th} input sample.

It therefore stands to reason that an equivalent input-output relationship can be achieved by first compressing, then filtering.

Noble Identity II: Interchange of Filtering with Expander

- **Prove the following two systems are equivalent**

System A

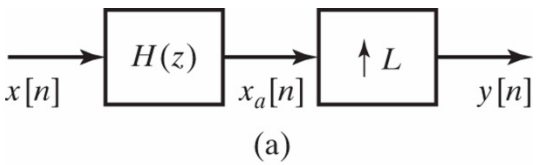

(a)

System B

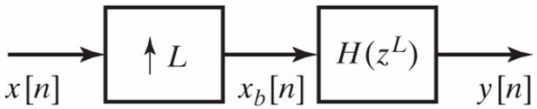

(b)

- **For System A, we have**

$$Y\left(e^{j\omega}\right) = X_a\left(e^{j\omega L}\right)$$
$$= H\left(e^{j\omega L}\right) X\left(e^{j\omega L}\right)$$
$$= H\left(e^{j\omega L}\right) X_b\left(e^{j\omega}\right)$$

which corresponds to system B

Multistage Decimation

- **When decimation ratios are large, need to use *long* filters to achieve adequate approximations to the required lowpass filters**
  - Significant reduction in computations can be achieved by using multistage decimation

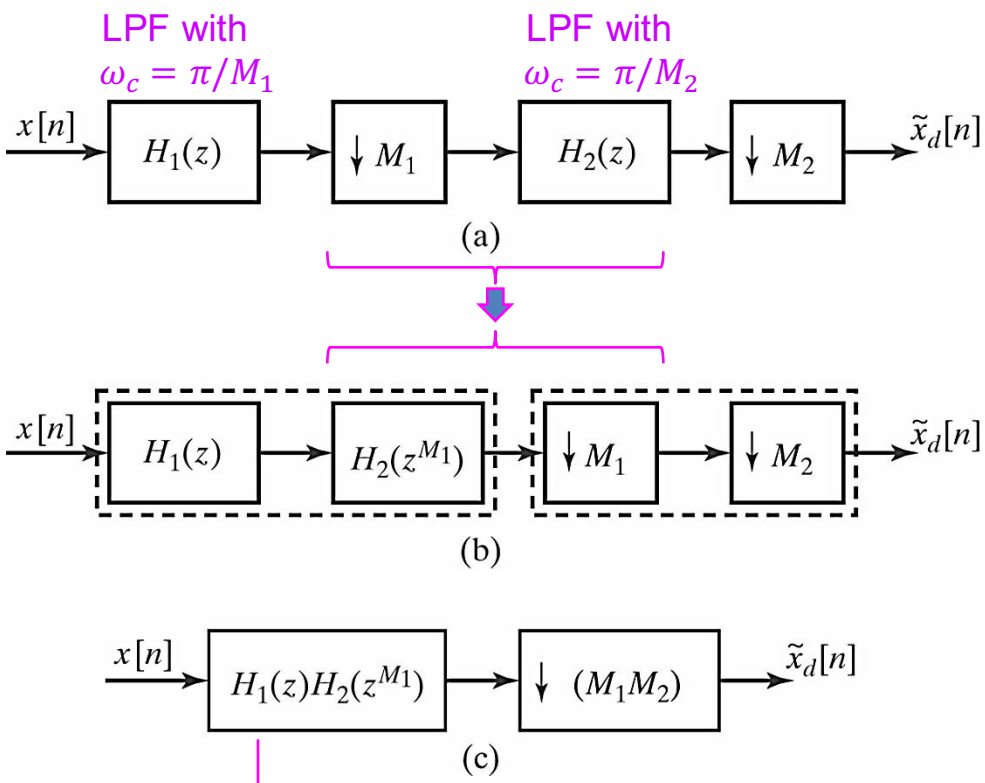

(a) 2-stage decimation system with overall decimation ratio $M = M_1M_2$.

(b) Modification of (a) using downsampling identity I

(c) Equivalent one-stage decimation.

$$H(z) = H_1(z)H_2\left(z^{M_1}\right)$$

$$h[n] = h_1[n] * \sum_{k=-\infty}^{\infty} h_2[k]\delta[n - kM_1]$$

Multistage Interpolation

- **Similar concept holds for interpolation**

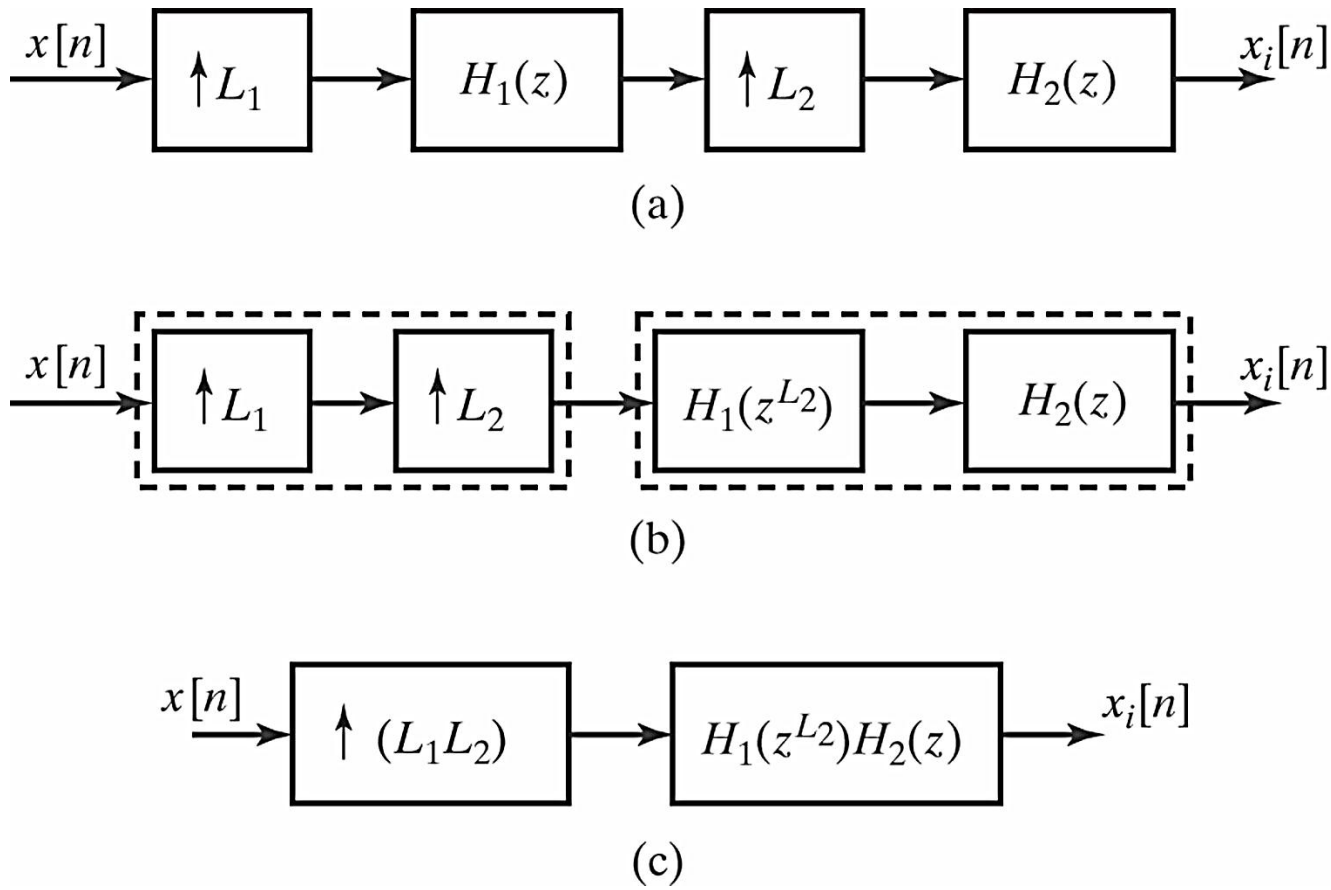

Polyphase Decompositions

Polyphase Decompositions

- **Polyphase decomposition of $h[n]$:**
  - Represent $h[n]$ as a superposition of M subsequences
  - Each subsequence consists of every M^{th} value of successively delayed versions of $h[n]$
  - These subsequences $e_k[n]$ are called the kth polyphase components of $h[n]$
- **Example**

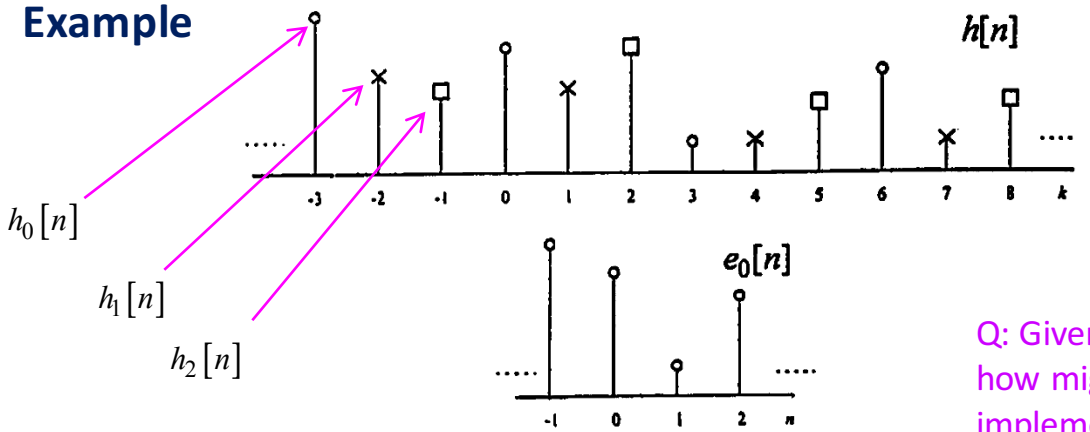

$$h_k[n] = \begin{cases} h[n+k] & n \text{ multiple of } M \\ 0 & \text{otherwise} \end{cases}$$

$$h[n] = \sum_{k=0}^{M-1} h_k[n-k]$$

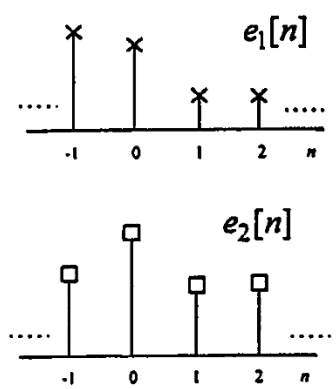

Q: Given the polyphase components $e_k[n]$, how might the original filter $h[n]$ be implemented?

Generating the Polyphase Components of $h[n]$

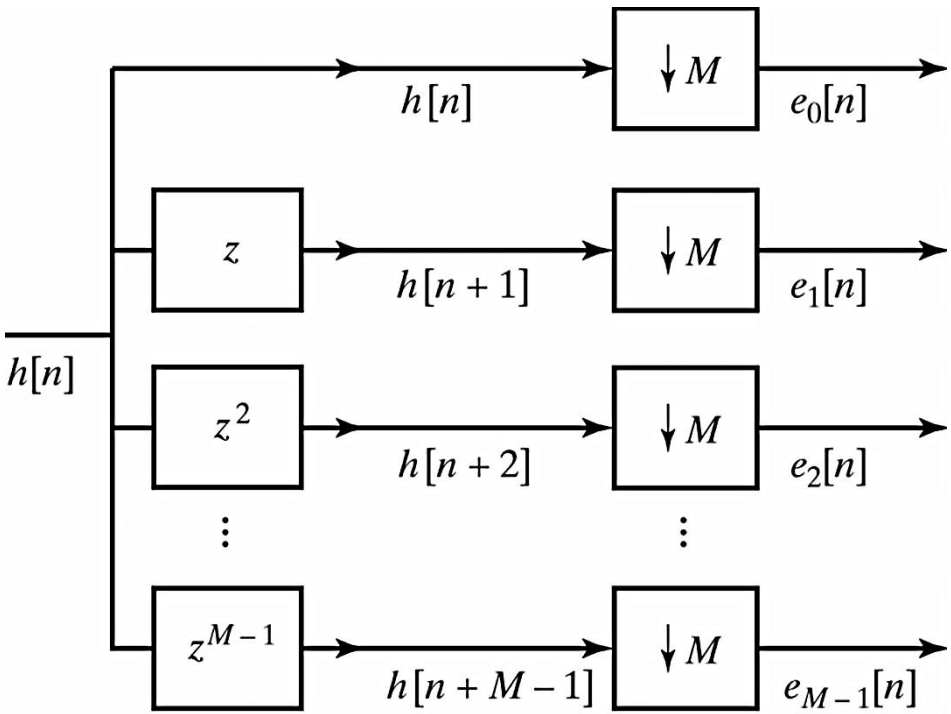

$$e_k[n] = h[nM + k] = h_k[nM]$$

$$h_k[n] = \begin{cases} h[n+k] & n \text{ multiple of } M \\ 0 & \text{otherwise} \end{cases}$$

Constructing $h[n]$ from its Polyphase Components

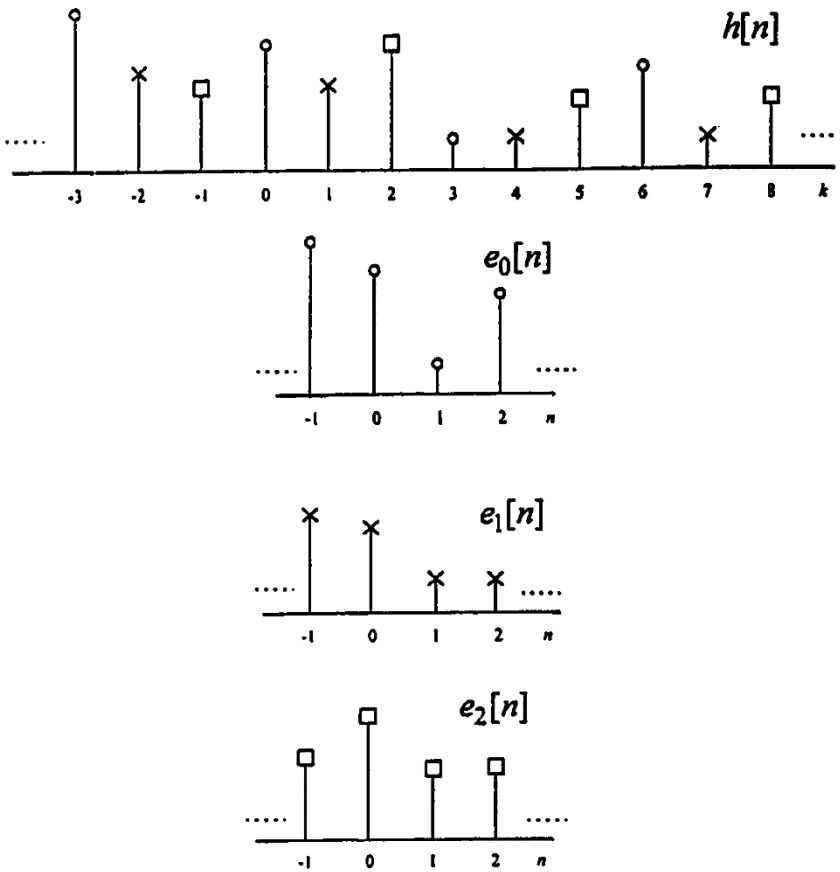

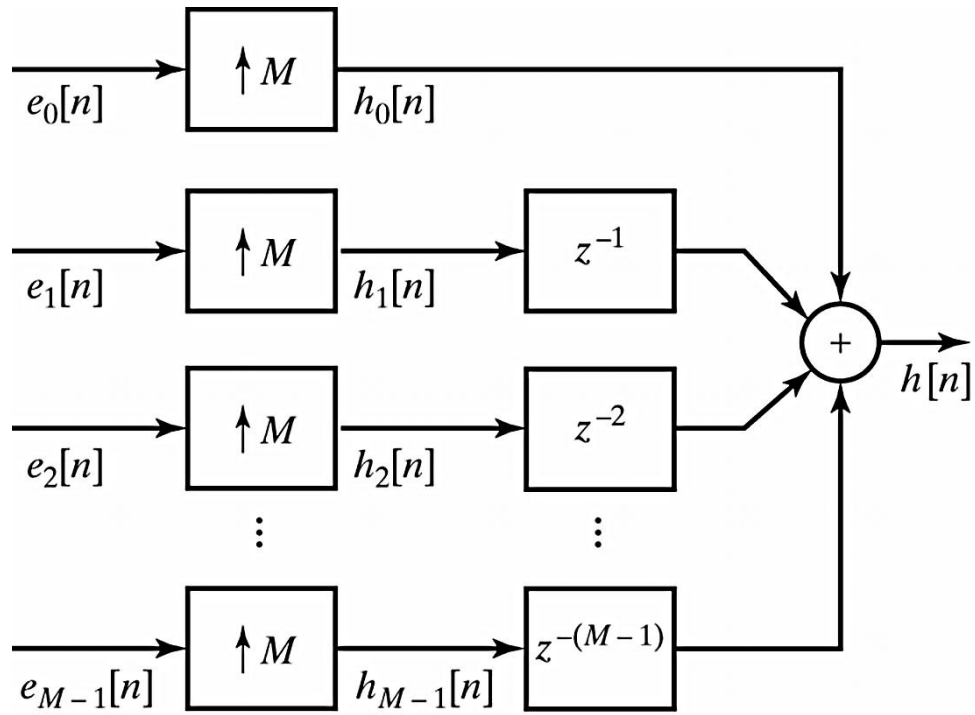

Polyphase Decomposition of *h*[*n*] using Polyphase Components

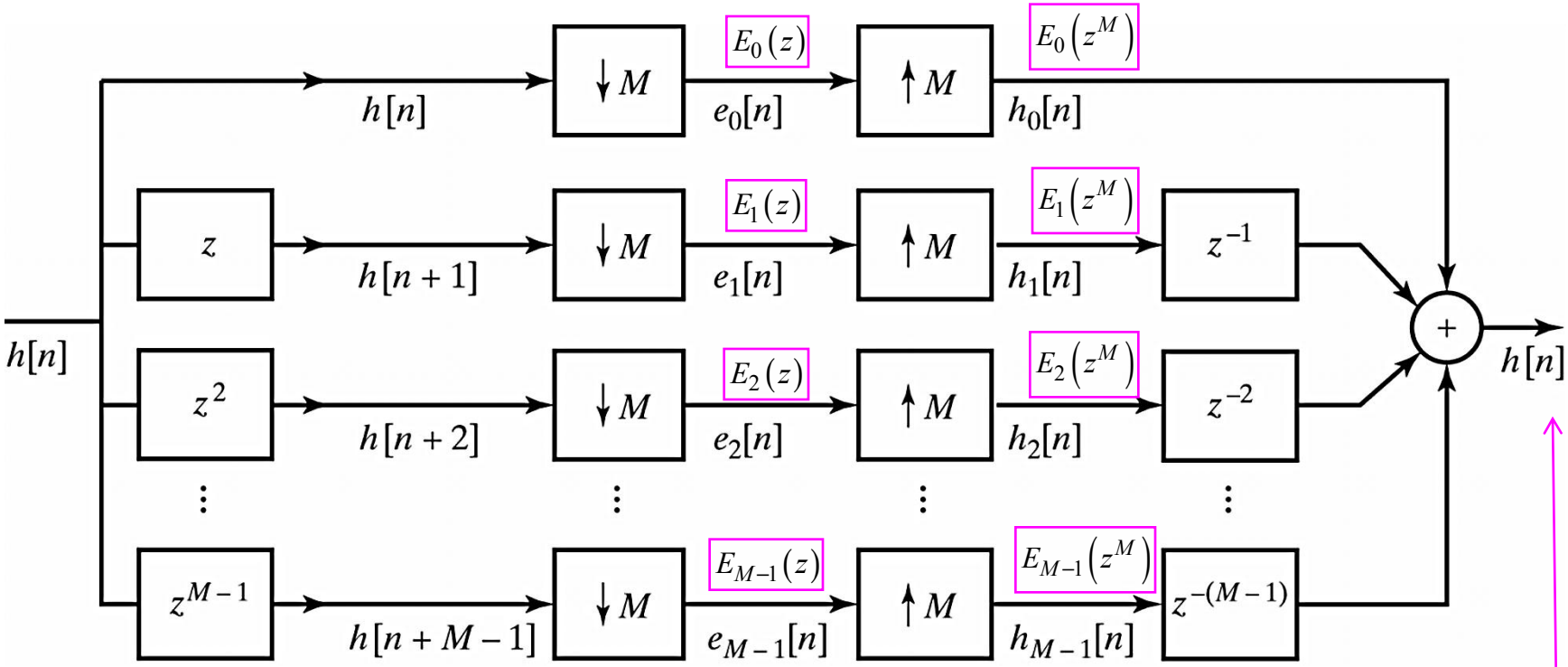

$$H(z) = \sum_{k=0}^{M-1} E_k\left(z^M\right) z^{-k}$$

Polyphase Decomposition of *h*[*n*] using Chained Delays (cont'd)

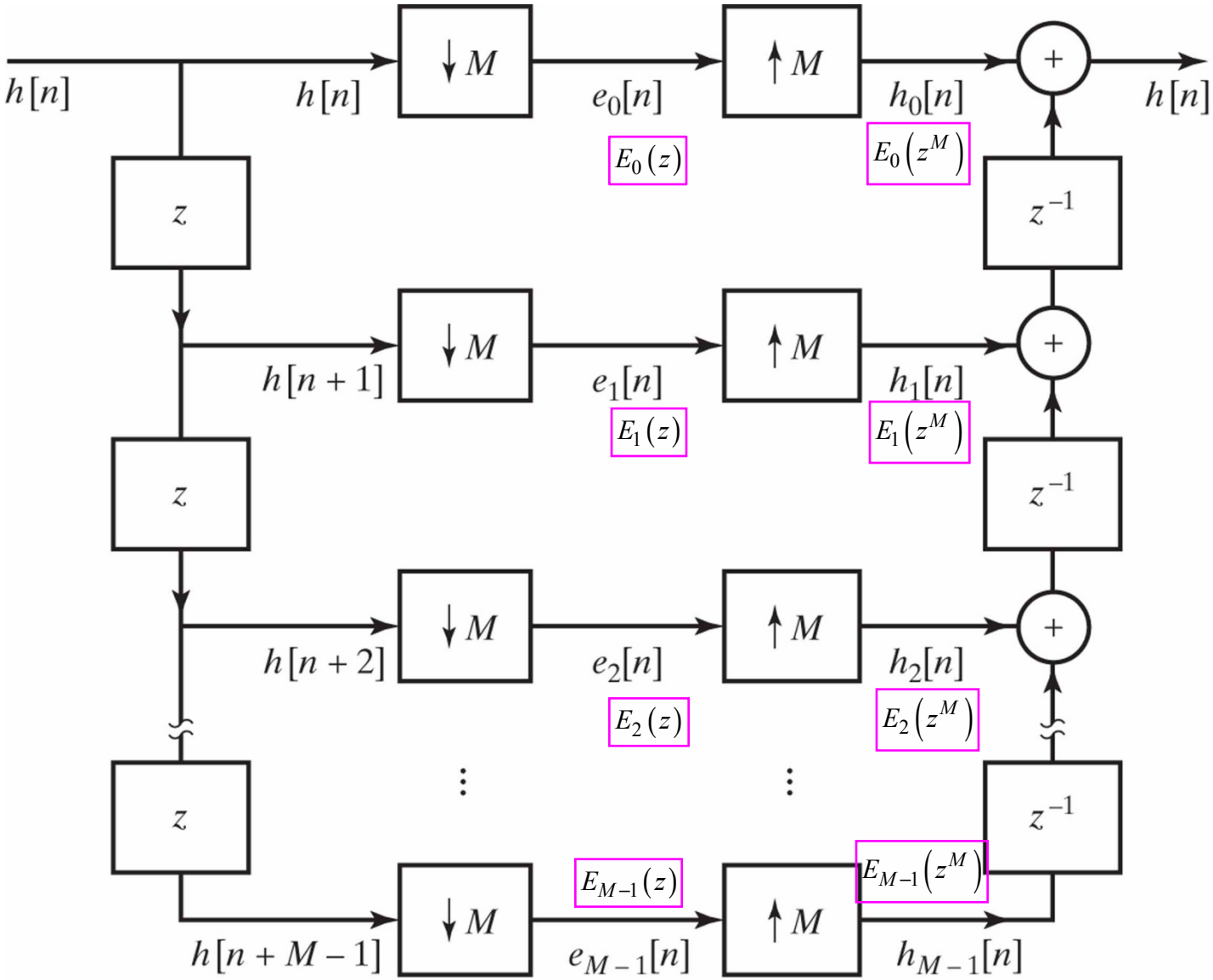

Realization Structure Based on Polyphase Decomposition

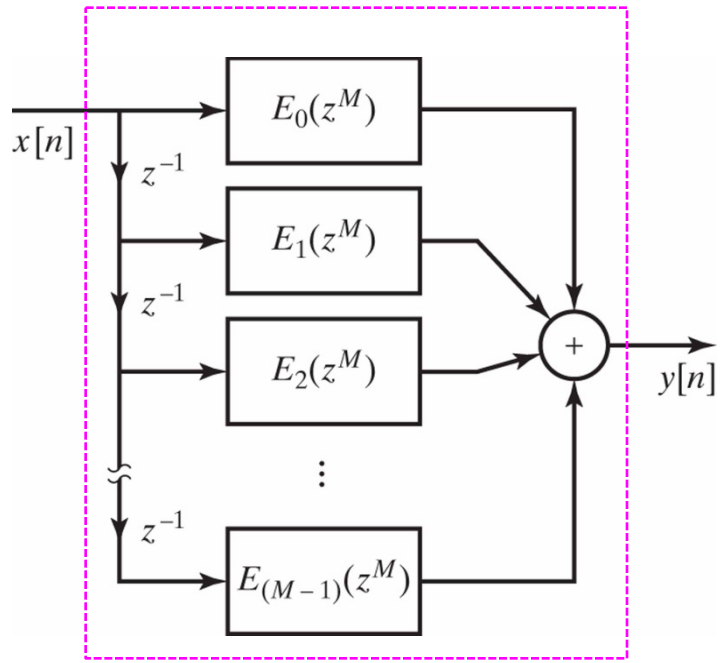

$$H(z) = \sum_{k=0}^{M-1} E_k\left(z^M\right) z^{-k}$$

Polyphase Implementation of Decimation Filters

***N*-point filter**

1 sample / sec

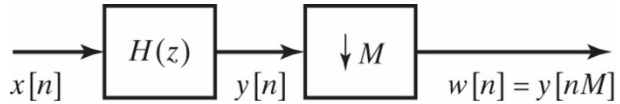

***N* MULTs, *N* – 1 ADDs**

$$H(z) = \sum_{k=0}^{M-1} E_k\left(z^M\right) z^{-k}$$

1 sample / sec

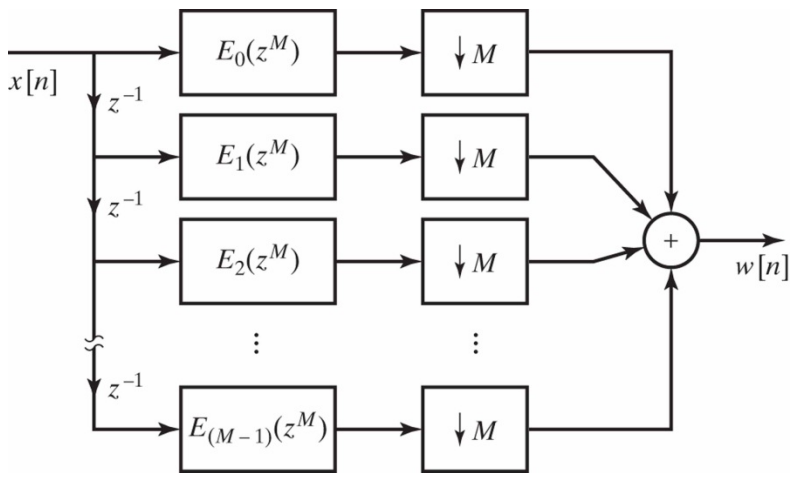

1 sample / M sec

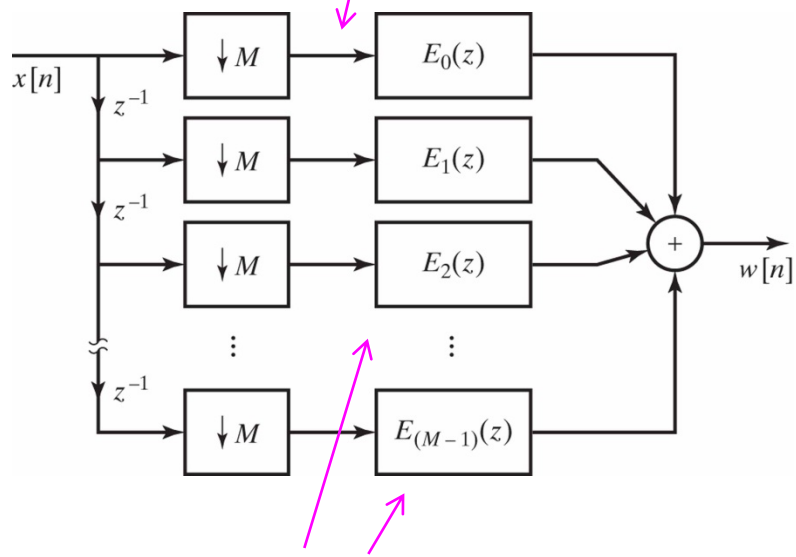

***N/M*-point filters**

Each filter requires:

- ***1/M* * (*N/M*) MULTs**
- ***1/M**(*N/M* – 1) ADDs**

Total:

- **(*N/M*) MULTs**
- **(*N/M* – 1) + *M* – 1 ADDs**

Polyphase Implementation of Interpolation Filters

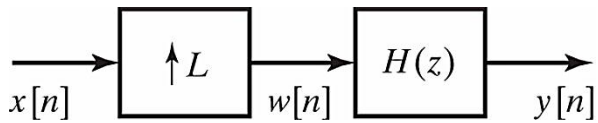

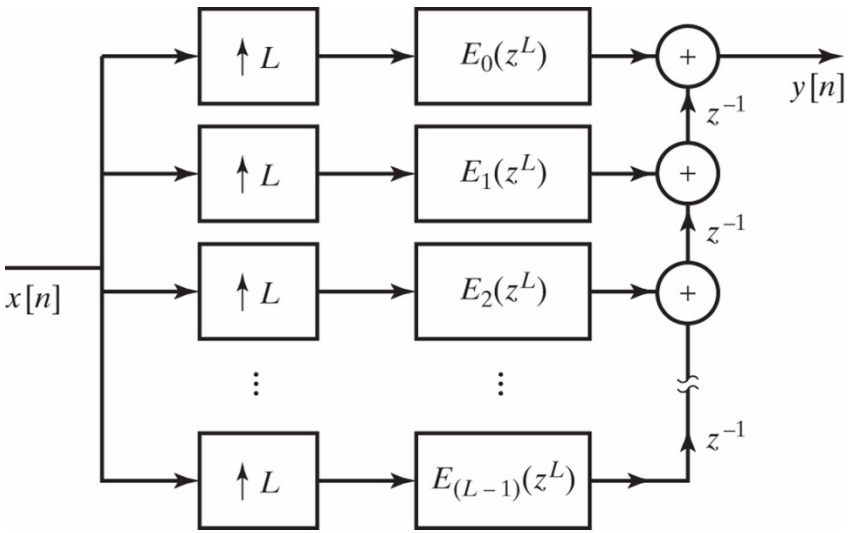

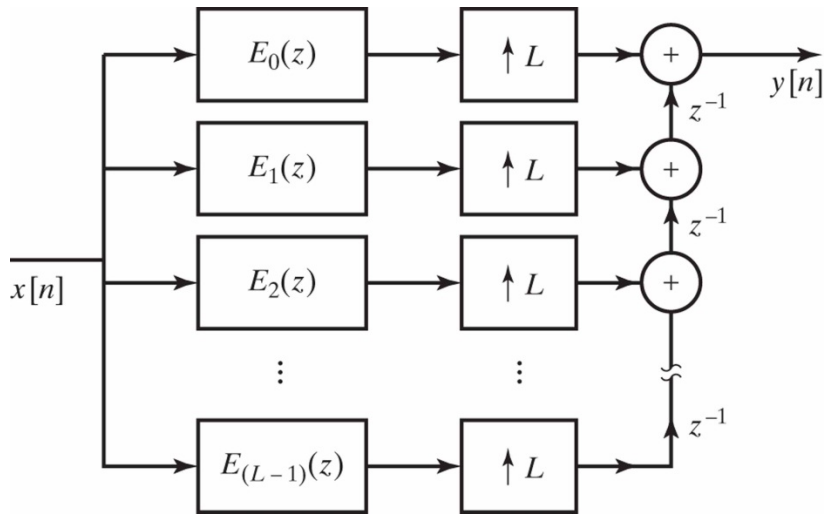

Polyphase Implementation of Filters

- **For both decimation and interpolation filters**
  - Gains in computational efficiency result from rearranging operations so that filtering is done at the low sampling rate

- **Combinations of interpolation and decimation systems for non-integer rate changes lead to significant savings when high intermediate rates are required**

Multirate Filter Banks

- **Polyphase structures for decimation/interpolation are used in filter banks for analysis/synthesis of audio and speech signals**

- **Two-channel analysis and synthesis filter bank**

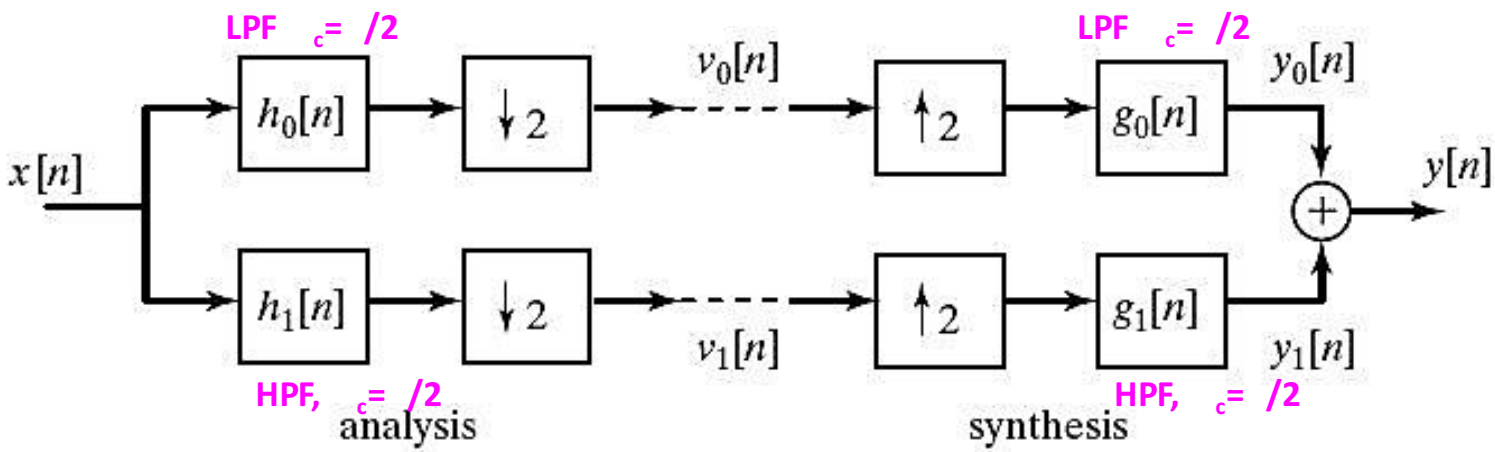

$$h_1[n] = e^{j\pi n} h_0[n]$$
$$H_1\left(e^{j\omega}\right) = H_0\left(e^{j(\omega-\pi)}\right)$$

Two-Channel Analysis and Synthesis Filter Bank

- **Frequency domain relations:**

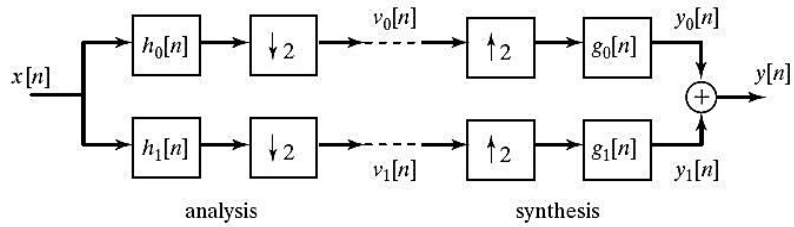

$$V_0\left(e^{j\omega}\right)=\frac{1}{2}\left(H_0\left(e^{j\omega/2}\right)X\left(e^{j\omega/2}\right)+H_0\left(e^{j(\omega-2\pi)/2}\right)X\left(e^{j(\omega-2\pi)/2}\right)\right)$$

$$V_1\left(e^{j\omega}\right)=\frac{1}{2}\left(H_1\left(e^{j\omega/2}\right)X\left(e^{j\omega/2}\right)+H_1\left(e^{j(\omega-2\pi)/2}\right)X\left(e^{j(\omega-2\pi)/2}\right)\right)$$

$$Y_0\left(e^{j\omega}\right)=G_0\left(e^{j\omega}\right)V_0\left(e^{j2\omega}\right)$$

$$Y_1\left(e^{j\omega}\right)=G_1\left(e^{j\omega}\right)V_1\left(e^{j2\omega}\right)$$

$$\begin{aligned}
Y\left(e^{j\omega}\right)&=Y_0\left(e^{j\omega}\right)+Y_1\left(e^{j\omega}\right)\\
&=G_0\left(e^{j\omega}\right)V_0\left(e^{j2\omega}\right)+G_1\left(e^{j\omega}\right)V_1\left(e^{j2\omega}\right)\\
&=\frac{1}{2}G_0\left(e^{j\omega}\right)\left(H_0\left(e^{j\omega}\right)X\left(e^{j\omega}\right)+H_0\left(e^{j(\omega-\pi)}\right)X\left(e^{j(\omega-\pi)}\right)\right)\\
&\quad+\frac{1}{2}G_1\left(e^{j\omega}\right)\left(H_1\left(e^{j\omega}\right)X\left(e^{j\omega}\right)+H_1\left(e^{j(\omega-\pi)}\right)X\left(e^{j(\omega-\pi)}\right)\right)
\end{aligned}$$

$$\begin{aligned}
Y\left(e^{j\omega}\right)&=\frac{1}{2}\left[G_0\left(e^{j\omega}\right)H_0\left(e^{j\omega}\right)+G_1\left(e^{j\omega}\right)H_1\left(e^{j\omega}\right)\right]X\left(e^{j\omega}\right)\\
&\quad+\frac{1}{2}\left[G_0\left(e^{j\omega}\right)H_0\left(e^{j(\omega-\pi)}\right)+G_1\left(e^{j\omega}\right)H_1\left(e^{j(\omega-\pi)}\right)\right]X\left(e^{j(\omega-\pi)}\right)
\end{aligned}$$

Two-Channel Analysis and Synthesis Filter Bank

$$Y\left(e^{j\omega}\right)=\frac{1}{2}\left[G_0\left(e^{j\omega}\right)H_0\left(e^{j\omega}\right)+G_1\left(e^{j\omega}\right)H_1\left(e^{j\omega}\right)\right]X\left(e^{j\omega}\right)$$

$$\boxed{+\frac{1}{2}\left[G_0\left(e^{j\omega}\right)H_0\left(e^{j(\omega-\pi)}\right)+G_1\left(e^{j\omega}\right)H_1\left(e^{j(\omega-\pi)}\right)\right]X\left(e^{j(\omega-\pi)}\right)}$$

Can potentially introduce aliasing

- **If analysis and synthesis filters are ideal, then get perfect reconstruction:**

$$Y\left(e^{j\omega}\right)=X\left(e^{j\omega}\right)$$

- **If filters are non-ideal, can still obtain perfect or near perfect reconstruction if**

$$G_0\left(e^{j\omega}\right)H_0\left(e^{j(\omega-\pi)}\right)+G_1\left(e^{j\omega}\right)H_1\left(e^{j(\omega-\pi)}\right)=0$$

- **This condition is called *alias cancellation condition*.**
- **One set of conditions that satisfy the above equation is:**

$$h_1[n]=e^{j\pi n}h_0[n] \quad \Rightarrow \quad H_1\left(e^{j\omega}\right)=H_0\left(e^{j(\omega-\pi)}\right)$$

$$g_0[n]=2h_0[n] \quad \Rightarrow \quad G_0\left(e^{j\omega}\right)=2H_0\left(e^{j\omega}\right)$$

$$g_1[n]=-2h_0[n] \quad \Rightarrow \quad G_1\left(e^{j\omega}\right)=-2H_0\left(e^{j(\omega-\pi)}\right)$$

$h_0[n]$ and $h_1[n]$ are <u>Quadrature Mirror Filters</u>

They impose symmetry about = /2

Two-Channel Analysis and Synthesis Filter Bank

- **Substituting back, we obtain:**

$$Y\left(e^{j\omega}\right)=\left[H_0^2\left(e^{j\omega}\right)-H_0^2\left(e^{j(\omega-\pi)}\right)\right]X\left(e^{j\omega}\right) \qquad (**)$$

- **Perfect reconstruction ➔** $H_0^2\left(e^{j\omega}\right)-H_0^2\left(e^{j(\omega-\pi)}\right)=e^{-j\omega M}$ *(allow a phase shift of M)*

- **It can be shown that the only computationally realizable filters satisfying (**) are:**

$$h_0[n]=c_0\delta[n-2n_0]+c_1\delta[n-2n_1-1]$$

n_0, n_1 arbitrary integers

c_0, c_1 satisfy $c_0c_1=\frac{1}{4}$

- **Such filters cannot provide sharp frequency selective properties needed in speech and audio applications**
- **But to illustrate the concept, consider 2-point moving average filter**

$$h_0[n]=\frac{1}{2}\left(\delta[n]+c\delta[n-1]\right) \qquad H_0\left(e^{j\omega}\right)=\cos(\omega/2)e^{-j\omega/2}$$

- **Obtain:**

$$Y\left(e^{j\omega}\right)=e^{-j\omega}X\left(e^{j\omega}\right)$$

Two-Channel Analysis and Synthesis Filter Bank

- **Polyphase techniques can be used to save computations in the implementation of analysis/synthesis filter banks**

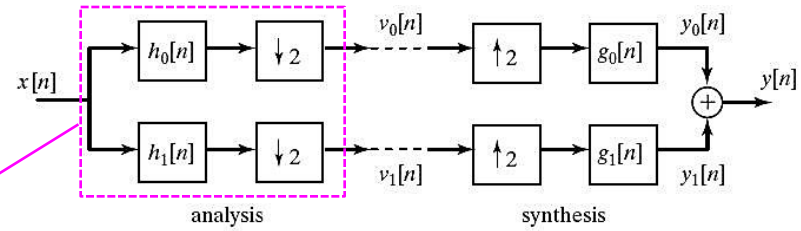

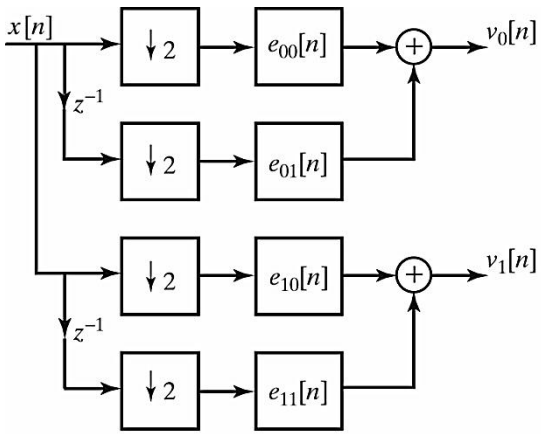

(a)

$$e_{00}[n] = h_0[2n]$$
$$e_{01}[n] = h_0[2n+1]$$
$$e_{10}[n] = h_1[2n] = e^{j2\pi n} h_0[2n] = e_{00}[n]$$
$$e_{11}[n] = h_0[2n+1] = e^{j2\pi n} e^{j\pi} h_0[2n+1] = -e_{01}[n]$$

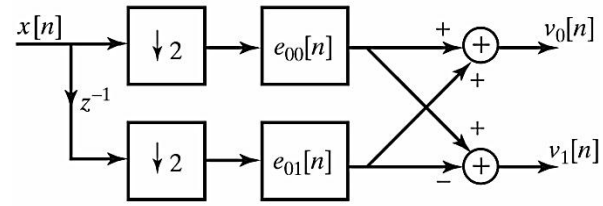

(b)